" B O N N A Z "

MACHINE TRAINING MANUAL, BASIC REPAIRS & MAINTENANCE

PLUS

TRICKS OF THE TRADE

A COMPREHENSIVE STUDY OF THE EMBROIDERY BUSINESS



By RUTH E. FRANKLIN ARTISTIC TOUCH EMBROIDERY CO.

"CHAIN STITCH EMBROIDERY"
"BONNAZ"

First Edition:
Copyright © 1986,
Artistic Touch Publications,
Ruth E. Franklin Author
St. Louis, Missouri U.S.A.

Second Edition, revised:
Copyright © 1988,

Printed in St. Louis, Missouri U.S.A.

All rights reserved. no part of this Book may be reproduced in any form or by any means without the permission in writing from the publisher.

This publication reflects extensive research and analysis by the Author over a period of many years; however it is sold without any warranty express or implied as to the accuracy or completeness of the contents.

Credits and our Thanks! to the CORNELY CO. France, and the SINGER CO. U.S.A. for their contribution & assistance in furnishing information and parts list.

PROFESSIONALISM

A young woman was visiting a Sculptor in his studio. She watched him work for a few moments, then said: "I never knew sculpture was so easy . . . I'll bet I could do that!"

"Sure, nothing to it," said the artist, "All you need is a block of marble and a hammer and chisel. Then you simply knock off all the marble you don't want."

It's a quirk of human nature that other people's jobs usually look easier to us than our own. And to add to the irony, the more talented the other person is, the easier his job looks!

None of us arrived at any trade worth while, without making hundreds of sacrifices and hundreds of decisions, some of them wrong . . . but many more right. We've made sacrifices which we alone know about. We've worked long and hard to polish our skills. Professionalism is the result of dedicated determination plus that something extra, that makes that which is difficult look simple when done by a master.

Author Unknown

I N D E X

Copyright.....2
Index.....3
Professionalism.....4
About the Author.....5
Purpose for writing this book.....9
Rumors that hurt the industry.....9
Who invented the chain stitch machine?....9
How long will it take to
learn to write your name?.....10
The Artistic Touch Commitment.....10
Do you want to be
a "SEWER" or an "EMBROIDERY ARTIST" ?....11
Do you need hands-on training.....12
Where to order parts.....13
Singer Machine Diagram.....14
Operator removable parts.....15
SINGER PARTS LIST.....16 to 28
CORNELY PARTS LIST.....29 to 38

The Embroidery Business.....39
Pricing.....41
History of "BONNAZ" Embroidery Machines..43
How the machine works.....45
Learning the names of the parts.....46
Your chair.....46
Speed.....47
Pantograph or universal movement.....47
Design of a pantograph.....48
Learning to operate the machine.....49
Stop motion machines.....49
Becoming acquainted with the machine.....51
Replacing the needle bar.....52
Practice example.....53
Needles & nipples.....54
Thread, needle,
nipple & plate hole chart.....55
Regular size & metric size needle chart..55
Changing the nipple.....56
Left-handed operators.....56
More practice.....56
Threading the machine.....57
How to break off the thread.....58

"EMBROIDERY ARTIST".....59
Maintenance & oiling.....60
Cleaning.....60
Thread problems.....61
How to tangle proof thread cones.....62
How to change thread colors.....63
How to adjust the length of the stitch...63
How to adjust the foot.....63
How to adjust the nipple.....65
What the different
types of feet are used for.....67
Setting up the machine
to work with cones of thread.....68
Diagram for placing
eyelet screws under the machine table....68
Adjusting the thread tension.....69
Working with spools.....69
The LOOPER
it's function & proper timing.....70
Diagram for LOOPER settings (timing).....70
The LOOPER OPERATING GEAR.....70
Manually changing the LOOPER setting.....71
Removing the LOOPER GEAR ASSEMBLY.....72
Chenille embroidery.....74
How to do scrolling.....76
Free-hand work.....77
Upper case free-hand script alphabet.....79
Lower case free-hand script alphabet.....80
Practice designs.....81
Palm tree design.....82
Backing materials.....83
How to make burn-off crinoline.....84
How to make press-on appliques.....85
How to do lettering
& art work for embroidery.....85
The ARTISTIC TOUCH LETTERING BOOK.....87
The ARTISTIC TOUCH MONOGRAM BOOK.....88
How to make pounce
patterns for embroidery work.....89
How to stamp the design.....91
Trimming & removing
the backing material.....93
How to remove Chain Stitch Embroidery....94

Work aides.....95
Dress Embroidery.....97
Making Dress Embroidery samples.....97
Production.....99
Figuring your prices.....99
Embroidering Jackets.....100
A material to watch out for!.....100
Embroidering Bowling Shirts.....101
Be sure to spell the name correctly!....102
Out-lining letters.....103
Tricks & special touches.....103
Tee-shirts & double knits.....105
Saving the day!.....106
CHAIN STITCH MONOGRAMMING.....108
Towel monogram sizes.....109
Towel monogram placement.....109
The easy way to do bath mats.....110
Which initial goes where?.....110
Shaded monograms.....111
Backing for terry cloth.....111
Stamping terry cloth.....111
Other tips for working on terry cloth...112
Some special monogram tips.....112
Fancy shaded monogram sample.....113
Deluxe floral monogram sample.....114
Chenille letters & emblems.....115
Should you specialize
or try to do everything?.....115
Changing the machine to do chenille.....116
Additional adjustment to the nipple.....116
Additional adjustment to the foot.....116
The most in-expensive
way to make chenille letters.....117
A second way of doing the same thing....118
The original way
of doing the same thing.....119
Matching wool & orlon colors.....119
Art work for chenille.....120
Chenille samples.....121 to 125
Caring for chenille embroidery,
washing & dry cleaning.....126
Special tips for doing chenille work....126
"Motorcycle club colors."....127
Applique work.....128

Tackle-Twill lettering.....128
Tackle-Twill lettering done on
the CORNELY 121 BONNAZ machine.....129
Doing BONNAZ embroidery on caps & hats..129
Special Post-machines.....130
Working on hard to do items.....131
How to find a job as a
"BONNAZ" machine operator and,
Make money & have fun
with the Chain Stitch Machine!.....132
Making flags & banners.....135
Quilting.....139
Regular vermicelli sample.....142
Turkish vermicelli sample.....143
Sequins, rhinestones,
nail-heads, beads & pearls.....144
Trouble-shooting machine problems.....145
Where do you sell your work?.....148
Where to find services & supplies.....149
Some sage advice from an old timer.....150
"QUALITY!".....151
Another trap to avoid.....152
List of ARTISTIC TOUCH BOOKS & VIDEOS...153
ORDER FORM.....154

ABOUT THE AUTHOR

I began my career in the Embroidery Business in Los Angeles in 1947. I worked part time as a thread trimmer in an embroidery shop.

This particular shop did fancy dress embroidery for the fashion trade. I was fascinated by the embroidery machines. They were guided by the operator to sew in any direction by means of a handle under the machine! I pestered the owner of the shop, Barney Zonas, to teach me how to operate them.

Barney was an excellent teacher. In addition to teaching me to operate the machines, he insisted that I also learn art work, how to do all of the work preparation and he taught me how to maintain & repair the machines.

Barney had machines made by CORNELY, SINGER, LINTZ & ECKHARDT, SHERMAN-BLATZ and others, but he called them all "BONNAZ MACHINES!" I asked him why? He told me the machines with the handle was invented in France by a Mr. Bonnaz, so all of the machines guided by the handle under the machine are called "BONNAZ MACHINES," no matter what company made them.

I later learned a lot more about the history of the machines. I will go into it more later in the book.

In addition to Barney, I had another terrific advantage in learning to operate the Bonnaz machines . . . three of my older Sisters were "Bonnaz Machine Operators."

My first introduction to machine embroidery came when I was about eight years old. My Mother and I went to the shop where my Sisters worked one day. As we went up the stairs to the shop, I was overwhelmed by a large embroidered picture of a Raven at the top of the stairs. You could see each feather and the bird looked like it could just flap its wings and fly away!

I believe this is when I decided I wanted to learn how to do that! I was always interested in drawing even before I started to School. I loved coloring with crayons and

but this beautiful embroidery work really caught my attention.

From that time on, I was so fascinated with the work, I think I would have learned to operate the BONNAZ MACHINES even if the only way would have been to steal one!

When I started in the business, the work was seasonal. Especially in the dress embroidery. One shop would have plenty of work and the others would be laying the operators off. Due to this, I worked for just about every shop in Los Angeles that did dress embroidery. I am grateful to the owners of the many shops who took the time to teach me and were so patient with me while I was learning.

By working in so many shops, I had the opportunity to learn to operate many other Bonnaz machines that I would have never seen if I had only worked in one shop.

Later on, I left dress embroidery because it was so seasonal and went to work for a linen factory. Barth & Dreyfuss. I learned to design monogramming and I learned to do monogramming on the Chain Stitch, Cording & Satin Stitch machines. This is about the time that a new company called Meistergram designed a new type monogram machine that had a pantograph table so the operator could follow the design on the table and the machine did the work above where she was following the design. Of course, I had to learn how to do that too!

In 1953 I went to work for Champe-Craft in Burbank. At Champe-Craft, I learned to do Chain Stitch lettering and how to do chenille work. We did very intricate designs in chenille for a variety of motorcycle clubs including the "HELL'S ANGELS" and the "SATIN'S SLAVES!"

I also learned to do screen printing at Champe-Craft. I feel that I was very lucky to have had Bob Champe as a teacher. To this day, I have never ran across anyone in that field that I would consider to be better at it than Bob. I learned how to hand-cut film stencils for very small jobs and for things as large as bill-boards.

Photographic screen printing was just starting at that time and Bob and I learned together. While working for Bob, I found out I could do a lot of things I didn't think I could do! Bob would take the order and then we would have to figure out how to do it! No amount of money could have paid for the training I received at Champe-Craft.

My next job was working for Dave Davidson at Olympic Emblem Co. Again . . . I struck it lucky! Dave was just as adventuresome as Bob Champe had been. I learned to make all kinds of embroidered emblems because Dave took orders for them, so . . . I had to make them!

The Dodgers had just moved to Los Angeles and Dave wanted to come up with an easy way to put the L.A. logo on baseball caps. We experimented with all kinds of ways to glue the letters cut out of tackle-twill to the caps so we could sew them down. Quite by accident one day, a plastic bag brushed against an iron we were working with. The plastic melted. We both got the idea at the same time and we tried pressing the plastic onto the material . . . it worked and thus, the invention of the heat seal process! Dave went on to become the General Manager for Insta Lettering Machine Co. He has since retired. After all of these years, we still stay in touch.

In 1955 I went to work for NUDIE'S RODEO TAILORS in North Hollywood. At Nudie's we made fancy embroidered Country & Western outfits for all of the Country & Western Movie Stars. I did all of the art work and all of the fancy embroidery. We did work for Elvis Presley, Dolly Parton, Ray Price, Roy Rogers & Dale Evans, Johnny Cash, Hank Snow, Hank Williams, Rex Allen, Tex Williams, Audie Murphy and many others. Included in our list of customers were three President's of the United States! Kennedy, Johnson and Ronald Reagan.

While working for Nudie, I learned that nothing is impossible. Nudie's slogan was , "If you've got the cash . . . I've got the flash!" Nudie NEVER REFUSED ANY ORDER! He would tell me, "Go ahead, Ruth, I've got faith in you!" The job he wanted me to do could be anything from branding autographs into the leather toneau cover for a fancy convertible to embroidering the seat covers for a car or

perhaps making a fancy indian beaded belt! Of course, I would first have to learn how to do indian beading, but that didn't stop Nudie! Nudie has passed away, but I still do work for his wife, Bobbie. Bobbie & their Daughter Barbara still own the store.

I thought I had paid my dues in the embroidery business working for Barney, Bob, Dave & Nudie, but I found I still had a lot more to learn when I opened my own shop!

In 1969 I moved back to my home town, St. Louis, Mo. I worked for several companies here doing embroidery and screen printing and then in 1974, I opened Artistic Touch Embroidery & Monogramming.

Some how over the years, my shop became a school. I had started teaching people how to operate the machines almost as soon as I learned to operate them myself. Word got around that I taught hand-machine embroidery and people started contacting me from all over the States. Some would want to learn in order to work for me and others wanted to learn special machines or they wanted to open their own shops. I have even taught some of my competitors! I number among my students some of the best "EMBROIDERY ARTIST" in the United States.

In keeping with the way I was taught, in my own business, I have tried to be as versatile as possible in order to keep busy all year around. If I just did chain stitch or just monogramming, or just flags & banners or just emblems, we would have slow seasons. Since I went through those lay-offs when I was starting in the business, I prefer to stay busy. That is why we do everything at Artistic Touch!

As I grow older, I realize more & more, I am one of the last survivors of what is about to become a lost art. Yes, there are plenty of people who have learned to write names on the chain stitch machine . . . but there are very few who have gone on to become an "EMBROIDERY ARTIST on the chain stitch machine or any of the other hand-operated machines.

This is my purpose in writing the Artistic Touch Books and doing the Artistic Touch Video Training Tapes. I hope to pay back the debt I owe to the people who taught me by making sure that the "ART of HAND-MACHINE EMBROIDERY WILL LIVE ON!"

I also hope to bring about a RENAISSANCE of elegant embroidery work done by the "EMBROIDERY ARTIST" on these hand-operated machines.

To make matters even worse, and add to the death of the trade, there have been rumors going around that are completely un-true.

One terrible rumor is that the CORNELY COMPANY is no longer in business and parts are not available for the older machines!

CORNELY was the orininal manufacturer of "BONNAZ MACHINES" and they have been in business in France since 1866. The Company still makes the full line of Bonnaz machines and new and used machines are available as well as parts for all CORNELY machines . . . new and old!

The people who spread these rumors know very little about the business! They are self-taught, and they just make things up as they go along! They don't go to the trouble to check before they start telling their self-serving mis-information to people. They are not concerned about the harm they are doing to a dedicated business that has been around for one-hundred & twenty-two years!

These self-taught experts haven't even bothered to find out who invented the chain stitch embroidery machine in the first place. I was surprised to be told on a competitors Video that the machine was invented by "PIERRE CORNELY!" They think the only "UNIVERSAL MOVEMENT MACHINE" (that is what Mr. Bonnaz called his invention) is the Chain Stitch machine!

They have never seen the other "BONNAZ MACHINES" that sew on sequins, pearls and soutache braid. There are machines

that do a three-thread cording stitch that is raised above the material. There are other universal movement machines that do a zig zag lock stitch instead of the chain stitch, These can be used to do all kinds of intricate embroidery work as well as applique work and sewing on tackle-twill lettering. There are many other machines that do different stitches and different things. They are all described in detail in Artistic Touch Book number four, "CORDING, BRAID & SPECIAL MACHINES."

The ART of HAND-MACHINE EMBROIDERY is not going to live on unless people motivated to learn the trade are able to get ACCURATE INFORMATION and PROFESSIONAL TRAINING!

All of the information I put into the ARTISTIC TOUCH BOOKS & VIDEO TRAINING TAPES has been thoroughly checked out before it is printed! Several of my former employers, Dave Davidson, Bobbie Nudie and Millie Edwards as well as two of my Sisters check everything before it is printed. In addition, copies of everything is sent to Christine DiChamp, the present owner of the CORNELY COMPANY for her evaluation.

With the ARTISTIC TOUCH BOOKS & VIDEO TRAINING TAPES, you can learn to write names on the Chain Stitch machine in about two hours time!

BUT . . . I am sure that after you have learned to write names, you are going to want to know much more about the machine and about the business!

ARTISTIC TOUCH is committed not only to meeting the needs of the BEGINNING STUDENT requiring GENERAL KNOWLEDGE, but also those seeking ADVANCED KNOWLEDGE about the BUSINESS, the OTHER MACHINES and OTHER INFORMATION they will need in order to SUCCEED in the EMBROIDERY BUSINESS!

The training methods used in the Books & Video Training Tapes have been tried & proven for many years. I don't teach you to be an AMATEUR! You are taught the PROFESSIONAL way of doing things so you will be able to operate your business in a professional manner.

You may think in the beginning that all you want to do is learn how to operate the machine . . . after you have done that, and you start operating your EMBROIDERY BUSINESS, you will be glad that you learned the PROFESSIONAL METHOD of doing things.

You will have the CONFIDENCE in your ABILITY, to take unusual jobs when customers bring them in because very few things will actually be unusual to you! I try to give you as much knowledge about different things so you will hardly ever be caught by surprise!

If you are taught that the way of transferring a design to the material in preparation to embroider the design is by tracing it onto the material, when someone comes into your shop and wants a hundred jackets embroidered . . . are you going to set there and trace each design onto the jackets individually? NOT IF YOU RECEIVED YOUR TRAINING FROM ARTISTIC TOUCH! You are taught not only how to draw the pattern in the first place, you are also taught how to make perforated patterns so you can stamp the design onto the jackets with a minimum of effort. You will even learn about special equiptment that can be used to make this job even easier! This is just one example of the PROFESSIONAL TRAINING you receive from ARTISTIC TOUCH!

You are also taught how to set up the work so it can be produced in the fastest way possible, how to trim the work so the stitching wont rip out, and hundreds of other things that can only be learned from a teacher who has been there!

People who learn to operate the machines and just become "SEWERS," end up JUST writing names on caps, bowling shirts & jackets and doing simple amateurish designs & lettering . . .

People who learn everything they can about the business and become "EMBROIDERY ARTIST," make the BIG BUCKS doing custom work for important people who are looking for QUALITY and are willing to pay for it!

Do you need to spend a lot of money to travel to St. Louis to learn the EMBROIDERY BUSINESS? . . . only if you want to! There are a few people who prefer hands-on training. Personal Training Classes are available at Artistic Touch School of Embroidery, if you really feel you need personal training, call at we can arrange a time convenient to both of us. I very seldom have more that one student at a time, so you get my un-divided attention!

This personal training will cost you $500.00 per week plus your travel expense and lodging. The Artistic Touch Books & Video Training Tapes cost you $49.95 each or you can purchase THE ENTIRE SET of seven Books & five Video Training Tapes for $500.00 . . . the same price as one weeks in class training!

I really think you can learn better with the Books & Video Tapes! You are not rushed, you can view a particular part over and over again until you completely understand it, and everything is in the Books and Video Tapes that you would learn if you did come for personal training.

If you think it would be easier or faster to learn with the personal training, you are wrong! It will take the same amount of time for you to learn because most of the learning is practice! Plus, you will learn a lot more from the Books & Video Training Tapes than we could possibly get around to in just one week.

I would rather have you learn to operate the machine from the Books & Videos, then . . . come to visit me some time! (of course there is no charge for this!) At that time, I can help you with anything you may feel you may not understand. In addition, I am as close as your phone! While you are learning from the Books or Videos, call me if you have a problem or just need some encouragement.

I have never said learning to operate the machines will be easy . . . nothing worth learning ever is! Every day will go a little better than the day before and before you realize it you will be an "EMBROIDERY ARTIST!" The more effort you put into learning . . . the more you will get out of it!

C H A I N S T I T C H

M A C H I N E S

P A R T S L I S T

On the following pages, you will find complete parts list for the Singer 114 W or K 103 &104 Chain Stitch Machines and complete parts list for the CORNELY TYPE A3 Chain Stitch Machine.

SINGER.....Pages 14 to 28

CORNELY.....Pages 29 to 38

Parts can be ordered from the following:

Artistic Touch (Singer & Cornely).....1-800-421-1991
Macpherson Monogram (Cornely).....1-919-294-5165
A & B Sewing Machine (Singer & Cornely).....1-314-231-7093
Sewing Machine Exchange (Singer & Cornely)..1-312-842-2700
Singer Industrial (Singer).....1-800-251-8523
Universal Sewing Supply (Singer).....1-800-325-3390
Troy Thread Co.(needles, & other things)....1-800-888-2400

Be sure to order parts by the PART NUMBER!

SINGER MACHINE DIAGRAM

The machine shown below is the Singer 114 W 103 Chain Stitch "BONNAZ" machine.

Depending on where & when your machine was manufactured, the letter in the model number can be "W" - "K" or "E".

Singer model 104 is the same, except it is designed to handle heavy fabrics.

Basically, all of the Chain Stitch machines are about the same . . . no matter what Company made them. The parts are called by the same names.

Older Cornely, Lintz & Eckhardt & Sherman-Blatz machines do not have the foot & nipple regulating pressure springs shown on this model, instead they have scissor loop springs.

Compare your machine to the picture shown and learn the names of the parts listed. You will need to know the names of these parts of the machine to understand the instructions that will follow in this book.

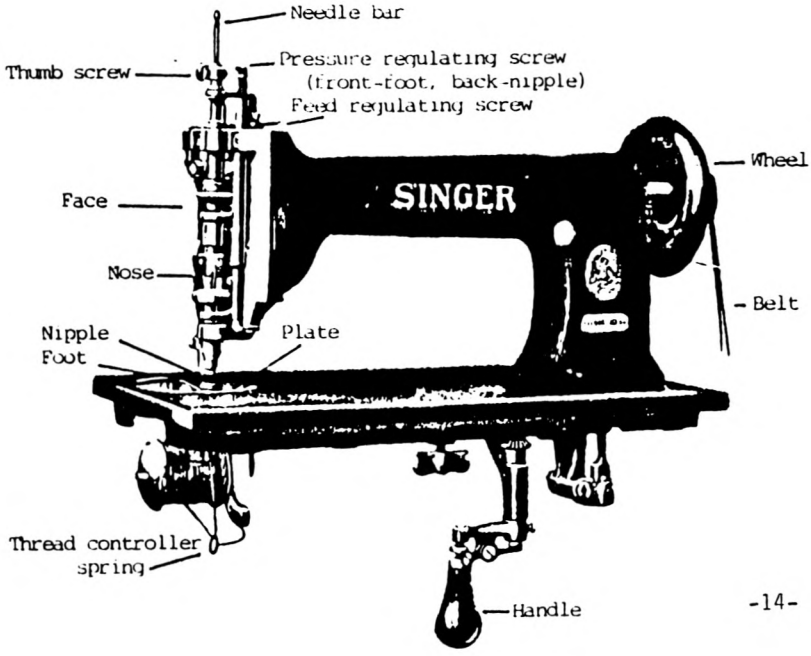

OPERATOR REMOVABLE PARTS

The parts shown on this page must be removed from the machine from time to time for cleaning & maintenance. You should learn the names of these parts to better understand the instructions that will follow in this book.

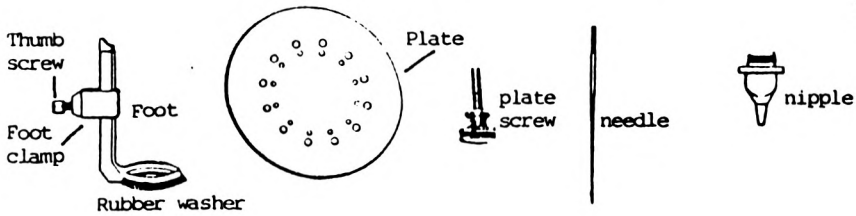

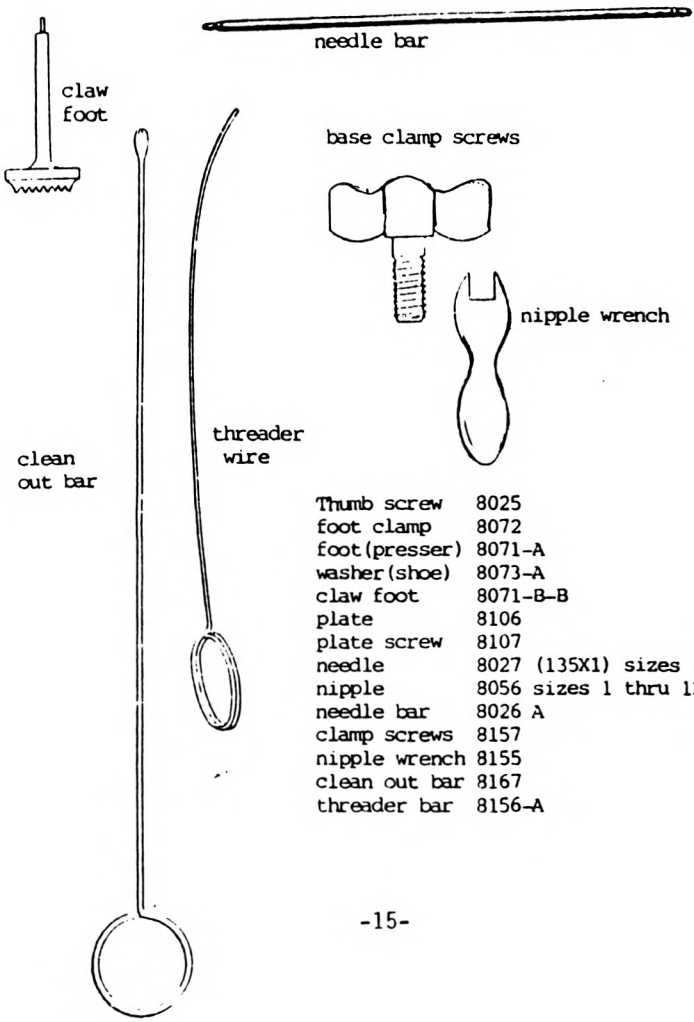

Thumb screw	8025
foot clamp	8072
foot(presser)	8071-A
washer(shoe)	8073-A
claw foot	8071-B-B
plate	8106
plate screw	8107
needle	8027 (135X1) sizes 1 thru 10
nipple	8056 sizes 1 thru 12
needle bar	8026 A
clamp screws	8157
nipple wrench	8155
clean out bar	8167
threader bar	8156-A

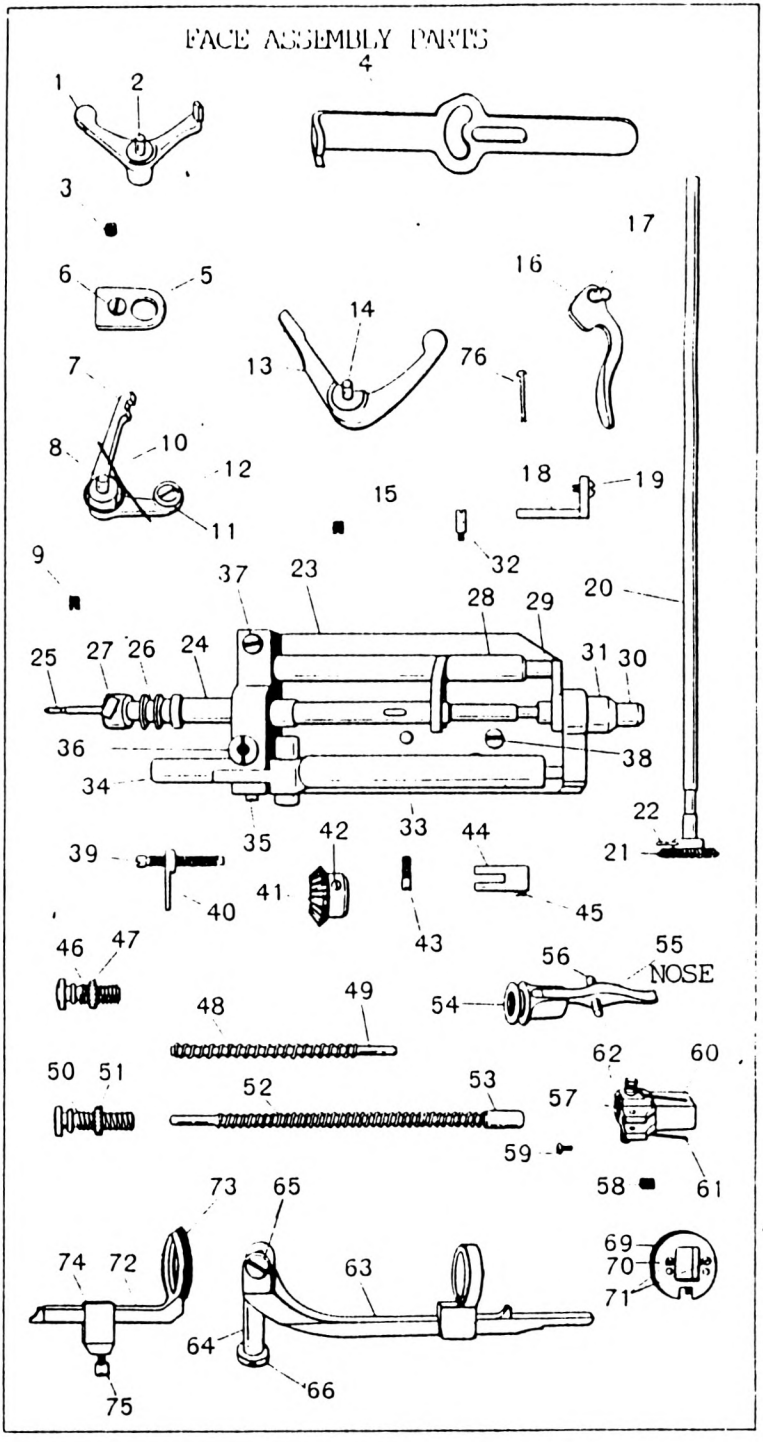
FACE ASSEMBLY PARTS
1
2
3
4
5
6
7
8
9
10
11
12
13
14
15
16
17
18
19
20
21
22
23
24
25
26
27
28
29
30
31
32
33
34
35
36
37
38
39
40
41
42
43
44
45
46
47
48
49
50
51
52
53
54
55
56
NOSE
57
58
59
60
61
62
63
64
65
66
69
70
71
72
73
74
75
76

FACE ASSEMBLY PARTS

Ref. No.	Parts No.	Description
1	8057	Nipple Carrier Bell Crank
2	8058	Nipple Carrier Bell Crank Hinge Stud
3	5225-C	Nipple Carrier Bell Crank Hinge Stud Set Screw
4	8023	Needle Operating Slide
5	8028	Arm Head Sleeve Cap
6	5176-A	Arm Head Sleeve Cap Screw
7	8042	Feed Bell Crank
8	8043	Feed Bell Crank Hinge Stud
9	5225-C	Feed Bell Crank Hinge Stud Set Screw
10	8046	Feed Bell Crank Spring
11	8044	Feed Bell Crank Roller
12	8045	Feed Bell Crank Roller Screw
13	8059	Presser Foot Slide Bell Crank
14	8058	Presser Foot Slide Bell Crank Hinge Stud
15	5225-C	Presser Foot Slide Bell Crank Hinge Stud Set Screw
16	8060-A	Presser Foot Lifter
17	8061	Presser Foot Lifter Hinge Screw
18	8055	Nipple Carrier Guide
19	8182	Nipple Carrier Guide Screw
20	8108	Feed Rotating Shaft
21	8109	Feed Rotating Shaft Gear
22	8147	Feed Rotating Shaft Gear Position Pin
23	8019	Arm Head
24	8029-A	Arm Head Sleeve
25	8026-A	Needle Holder
26	8024	Needle Holder Clamping Sleeve
27	8025	Needle Holder Clamping Sleeve Thumb Screw
28	8031	Feed Slide Bar
29	8049	Nipple Carrier
30	8050	Nipple Carrier Sleeve
31	8151	Nipple Carrier Sleeve Bushing
32	8051	Nipple Carrier Lifting Screw Stud
33	8062	Presser Foot Slide Bar
34	8063	Presser Foot Slide Bar Guide
35	8139	Presser Foot Slide Bar Adjusting Screw
36	8020	Arm Head Screw (upper) (long)
37	8021	Arm Head Screw (upper) (short)
38	8022	Arm Head Screw (lower)
39	8047	Feed Regulating Screw
40	8048	Feed Regulating Screw Lock Lever Nut
41	8030	Arm Head Sleeve Gear with Set Screw
42	129-B	Arm Head Sleeve Gear Set Screw
43	8138	Presser Foot Slide Bar Guide Set Screw
44	8064	Presser Foot Slide Bar Spring Stop
45	8140	Presser Foot Slide Bar Spring Stop Screw
46	8054	Nipple Carrier Thumb Screw (pressure regulating)

FACE ASSEMBLY PARTS CONTINUED

47	8160	Nipple Carrier Thumb Screw Nut
48	8052	Nipple Carrier Spring
49	8053	Nipple Carrier Extension
50	8067	Presser Foot Slide Bar Thumb Screw (pressure regulating)
51	8161	Presser Foot Slide Bar Thumb Screw Nut
52	8065	Presser Foot Slide Bar Spring
53	8066	Presser Foot Slide Bar Spring Plunger
54	8033	Feed Slide Block
55	8034-A	Feed Lever NOSE
56	8144	Feed Lever Hinge Pin
57	8035	Feed Lever Bracket
58	120-B	Feed Lever Bracket Set Screw
59	124	Feed Lever Bracket Set Screw
60	8036	Feed Recovering Spring (left)
61	8037	Feed Recovering Spring (right)
62	8038	Feed Recovering Spring Screw
63	8068	Presser Foot Lever with Feed Lever Bracket Guide Bearing and Pin
64	8069-A	Presser Foot Lever Swivel
65	8070	Presser Foot Lever Swivel Hinge Screw
66	5227	Presser Foot Lever Swivel Stop Screw
69	8039	Feed Lever Bracket Guide
70	8040	Feed Lever Bracket Guide Cap
71	8136	Feed Lever Bracket Guide Cap Screw
72	8071-A	Presser Foot
73	8073-A	Presser Foot Shoe (rubber)
74	8072	Presser Foot Clamp
75	8025	Presser Foot Clamp Thumb Screw
76	8145	Arm Head Position Pin

GEARS THAT OPERATE THE HANDLE

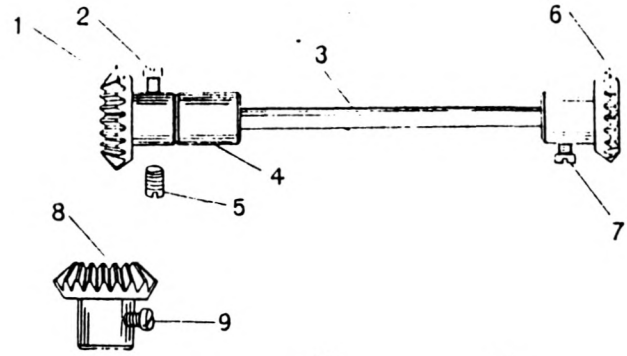



STOP-MOTION PARTS. These parts are not necessary for the operation of the machine.

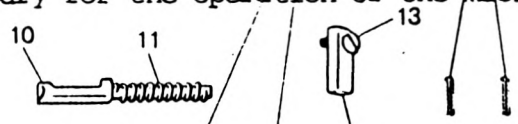

25

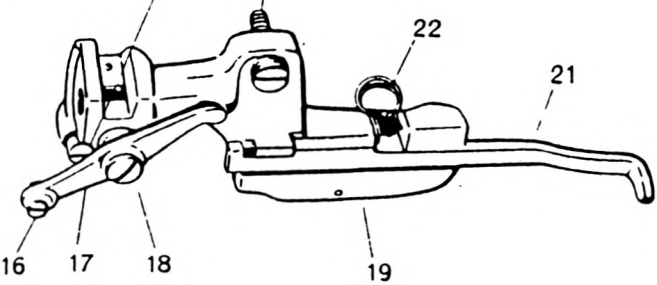



These parts are a carry over from the days of the treadle machine. See section regarding Stop-motion.

GEARS THAT OPERATE THE HANDLE

Ref. No.	Parts No.	Description
1	8110	Stitch Rotating Gear (upper) with Set Screw
2	8142	Stitch Rotating Gear (upper) Set Screw
3	8111	Stitch Rotating Gear Shaft
4	8180	Stitch Rotating Gear Shaft Bushing
5	132	Stitch Rotating Gear Shaft Bushing Screw
6	8112	Stitch Rotating Gear (lower) with Set Screw
7	8142	Stitch Rotating Gear (lower) Set Screw
8	8110	Feed Rotating Gear (upper) (rear) with Set Screw
9	8142	Feed Rotating Gear (upper) (rear) Set Screw

STOP - MOTION PARTS.

10	8079	Stop Bracket Interlocking Rod
11	8080	Stop Bracket Interlocking Rod Spring
12	8081	Stop Bracket Interlocking Stop Block
13	121-B	Stop Bracket Interlocking Stop Block Screw
14	8159	Stop Bracket Position Pin
15	8077	Stop Cam Roller
16	8078	Stop Cam Roller Screw Stud
17	8075	Stop Cam Rocking Lever
18	8076	Stop Cam Rocking Lever Hinge Screw
19	8074	Stop Bracket
20	8172	Stop Bracket Screw
21	8082	Starting Trip Lever Slide
22	8084	Starting Trip Lever Slide Spring
23	8083	Starting Trip Lever Slide Cap
24	124	Starting Trip Lever Slide Cap Screw
25	801	Stop Bracket Complete. (Ref.Nos.) 10, 11, 12, 13, 15, 16, 17, 18, 19, 21, 22, 23, & 24

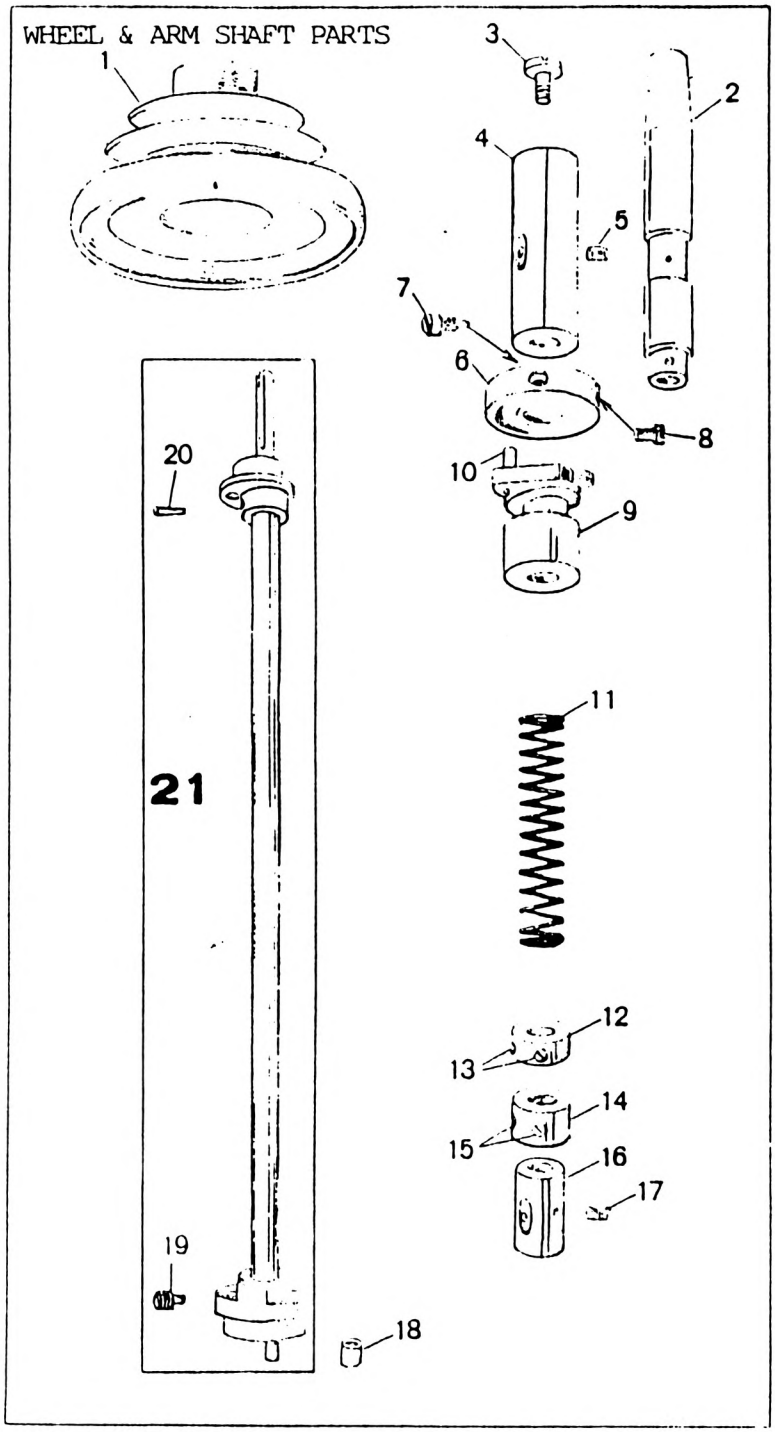
WHEEL & ARM SHAFT PARTS
1
2
3
4
5
6
7
8
9
10
11
12
13
14
15
16
17
18
19
20
21

WHEEL & ARM SHAFT PARTS

Ref. No.	Parts No.	Description
1	8017	Driving Pulley
2	8015	Driving Pulley Sleeve
3	8018	Driving Pulley Sleeve Screw
4	8016-A	Driving Pulley Sleeve Bushing
5	98	Driving Pulley Sleeve Bushing Screw
6	8012	Arm Shaft Driving Flange with Screws
7	8013	Arm Shaft Driving Flange Position Screw
8	8014	Arm Shaft Driving Flange Set Screw
9	8008	Stop Cam
10	8163	Stop Cam Driving stud
11	8009-A	Stop Cam Spring
12	8010	Stop Cam Spring Collar with Set Screws
13	132	Stop Cam Spring Collar Set Screw
14	5266	Arm Shaft Collar with Set Screws
15	132	Arm Shaft Collar Set Screw
16	8003-B	Arm Shaft Bushing
17	98	Arm Shaft Bushing Screw
18	8006	Needle Driving Cam Roller
19	8005-A	Needle Driving Cam Position Screw
20	8146	Looper Operating Cam Position Pin
21	813	Arm Shaft with Looper Operating Cam, Needle Driving Cam, Roller Stud, Positoin Pin and Position Screw

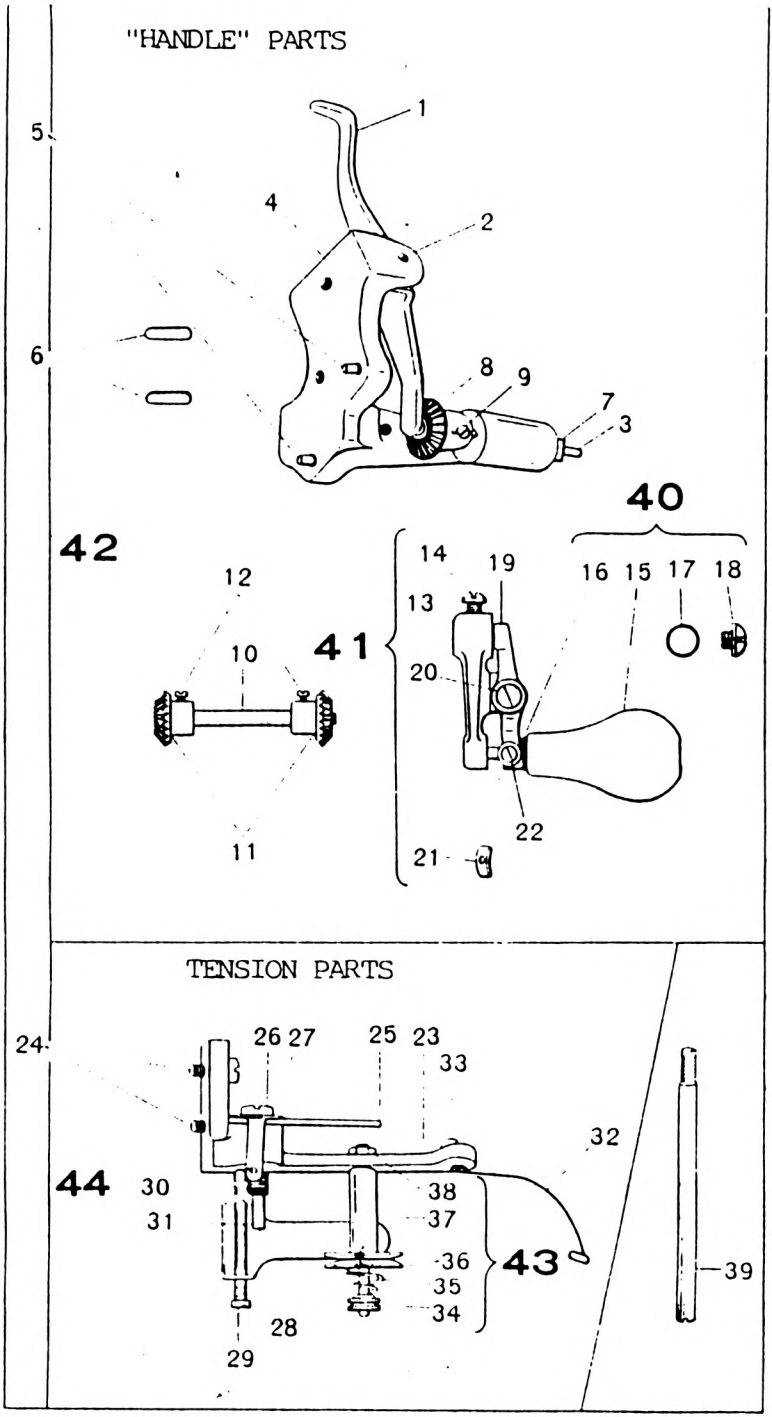
"HANDLE" PARTS
1
2
3
4
5
6
7
8
9
40
42
41
10
11
12
13
14
15
16
17
18
19
20
21
22
TENSION PARTS
23
24
25
26
27
28
29
30
31
32
33
34
35
36
37
38
39
43
44

Ref. No.	Parts No.	Description
1	8123	Starting Trip Lever (intermediate)
2	8124	Starting Trip Lever (intermediate) Hinge Screw
3	8122	Starting Trip Lever Rod
4	8113	Stitch Rotating Gear Bracket
5	8143	Stitch Rotating Gear Bracket Screw
6	8149	Stitch Rotating Gear Bracket Position Pin
7	8114-A	Stitch Rotating Hand Lever Shaft
8	8096	Stitch Rotating Hand Lever Shaft Gear with Set Screw
9	8142	Stitch Rotating Hand Lever Shaft Gear Set Screw
10	8117	Stitch Rotating Gear Bracket Shaft (intermediate)
11	8110	Stitch Rotating Gear Bracket Shaft (intermediate) Gear (back or front) with Set Screw
12	8142	Stitch Rotating Gear Bracket Shaft (intermediate) Gear (back or front) Set Screw
13	8115	Stitch Rotating Hand Lever with Set Screw
14	5176-A	Stitch Rotating Hand Lever Set Screw
15	8118	Stitch Rotating Hand Lever Handle
16	8116	Stitch Rotating Hand Lever Handle Sleeve
17	5070	Stitch Rotating Hand Lever Handle Sleeve Washer
18	8141	Stitch Rotating Hand Lever Handle Sleeve Screw
19	8119	Starting Trip Lever
20	8045	Starting Trip Lever Hinge Screw
21	8120	Starting Trip Lever Block
22	8121	Starting Trip Lever Block Screw Stud
23	8125	Tension Bracket
24	8143	Tension Bracket Screw
25	8131	Tension Regulating Lever
26	8132-A	Tension Regulating Lever Hinge Screw
27	4140-A	Tension Regulating Lever Hinge Screw Spring Washer
28	8127	Tension Regulating Plate
29	8128	Tension Regulating Plate Hinge Screw
30	8129-A	Tension Regulating Spring
31	8130-A	Tension Regulating Spring Screw Stud
32	8133-A	Thread Controller Spring
33	121	Thread Controller Spring Screw
34	81	Tension Thumb Nut
35	5267-A	Tension Spring
36	5190-A	Tension Disc
37	8164	Tension Stud
38	5207	Tension Stud Nut
39	8126	Spool Screw Stud
40	807	Stitch Rotating Hand Lever Handle Sleeve (Ref. No.) 16 with 15, 17 & 18
41	808	Stitch Rotating Hand Lever (Ref. No.) 13 with 14, 19, 20, 21, 22 & 40
42	809	Stitch Rotating Gear Bracket Complete, (Ref. Nos.) 1, 2, 3, 4, 7, 8, 9, 10, Two 11, Two 12 & 41
43	810	Tension Complete, (Ref. Nos.) 34, 35, Two 36, 37 & 38
44	811	Tension Bracket Complete, (Ref. Nos.) 23, 25, 26, 27, 28, 29, 30, 31, 32, 33 & 43

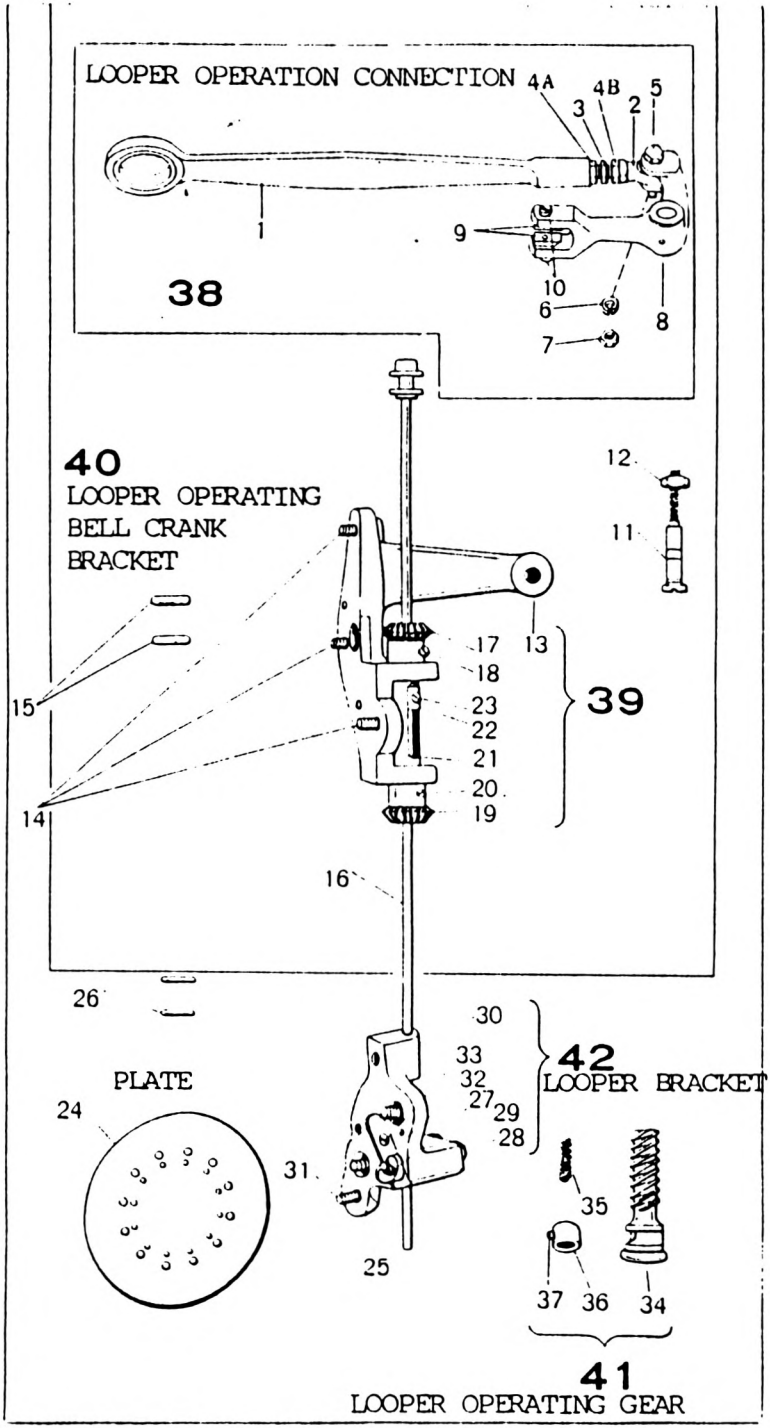
LOOPER OPERATION CONNECTION
4A
4B
3
2
5
1
9
10
6
7
8
38
40
LOOPER OPERATING
BELL CRANK
BRACKET
12
11
15
14
17
18
23
22
21
20
19
13
39
16
26
30
33
32
27
29
28
42
LOOPER BRACKET
PLATE
24
31
25
35
37
36
34
41
LOOPER OPERATING GEAR

Ref. No.	Parts No.	Description
1	8085-B	Looper Operating Connection (Cam end)
2	8177	Looper Operating Connection Joint
3	8174	Looper Operating Connection Joint Pitman
4A	8175	Looper Operating Connection Joint Pitman Nut (Upper)
4B	8176	Looper Operating Connection Joint Pitman Nut (Lower)
5	8178	Looper Operating Connection Joint Hinge Stud
6	8179	Looper Operating Connection Joint Hinge Stud Spring Washer
7	5207	Looper Operating Connection Joint Hinge Stud Nut
8	8089-A	Looper Operating Bell Crank
9	8092	Looper Operating Bell Crank Hinge Block
10	8093	Looper Operating Bell Crank Hinge Block Screw
11	8090	Looper Operating Bell Crank Hinge Screw
12	8091	Looper Operating Bell Crank Hinge Screw Nut
13	8088	Looper Operating Bell Crank Bracket
14	8143	Looper Operating Bell Crank Bracket Screw
15	8149	Looper Operating Bell Crank Bracket Position Pin
16	8094	Looper Operating Shaft
17	8096	Looper Operating Shaft Sleeve Gear with Set Screw
18	8142	Looper Operating Shaft Sleeve Gear Set Screw
19	8097	Looper Operating Shaft Sleeve and Gear with Set Screw
20	8142	Looper Operating Shaft Sleeve and Gear Set Screw
21	8095-A	Looper Operating Shaft Guide
22	8098-A	Looper Operating Shaft Guide Block
23	129-B	Looper Operating Shaft Guide Block Set Screw
24	8106	Needle Plate
25	8107	Needle Plate Clamping Thumb Screw
26	8150	Presser Foot Lifting Stop Pin
27	8100-A	Looper
28	8152	Looper Collar with Set Screw
29	129-B	Looper Collar Set Screw
30	8099	Looper Bracket
31	8158	Looper Bracket Screw
32	8101	Looper Position Plate
33	124	Looper Position Plate Screw
34	8102	Looper Operating Gear (spiral)
35	8103	Looper Operating Gear Spring
36	8104	Looper Operating Collar with Set Screw
37	8105	Looper Operating Collar Set Screw
38	802-A	Looper Operating Connection Complete, (Ref. Nos.) 1, 2, 3, 4A, 4B, 5, 6, 7,8, Two 9 & Two 10
39	803	Looper Operating Bell Crank Bracket (Ref.No.) 13 with 17 to 23
40	804-A	Looper Operating Bell Crank Bracket Complete, (Ref. Nos.) 11, 12, 16, 38 & 39
41	805	Looper Operating Gear (Ref. No.) 31 with 35, 36 & 37
42	806	Looper Bracket Complete, (Ref. Nos.) 27, 28, 29, 30, 32 & 33

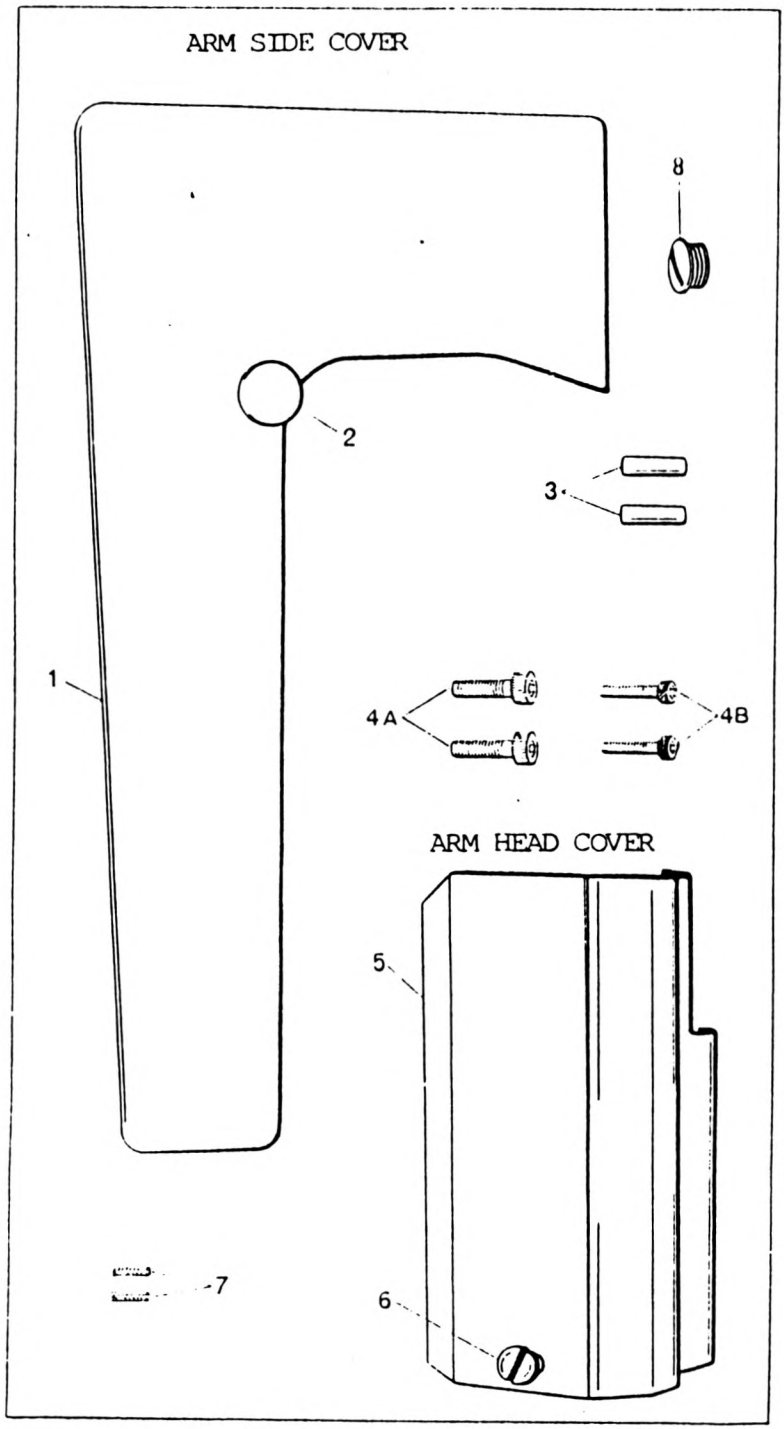
ARM SIDE COVER
8
2
3
1
4A
4B
ARM HEAD COVER
5
7
6

Ref .No.	Parts No.	Description
1	8135	Arm Side Cover
2	123	Arm Side Cover Thumb Screw
3	8154	Arm Position Pin
4A	8153-A	Arm Screw (long)
4B	8153-B	Arm Screw (short)
5	8134	Arm Head Cover
6	5227	Arm Head Cover Thumb Screw
7	8150	Arm Head Position Pin
8	8181	Arm Screw

MACHINES A BRODER

Cornely

TYPE A3

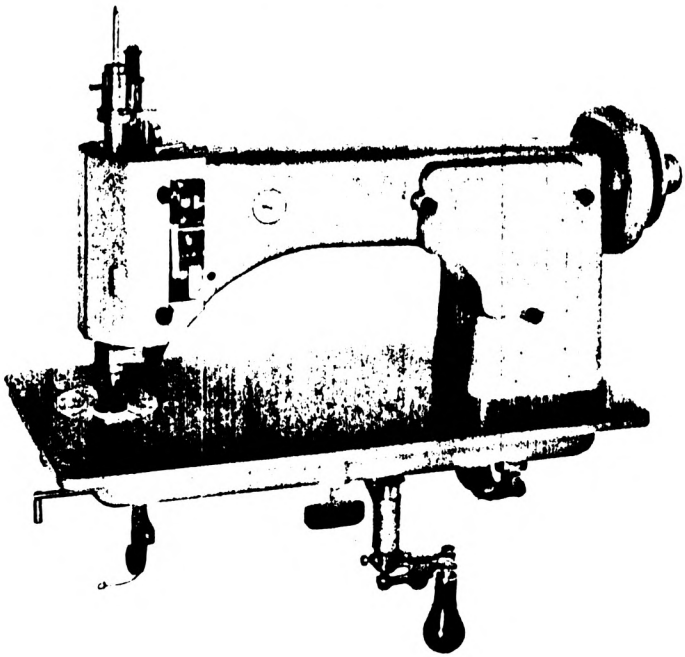

9, rue François COPPÉE
92240 MALAKOFF
(FRANCE)

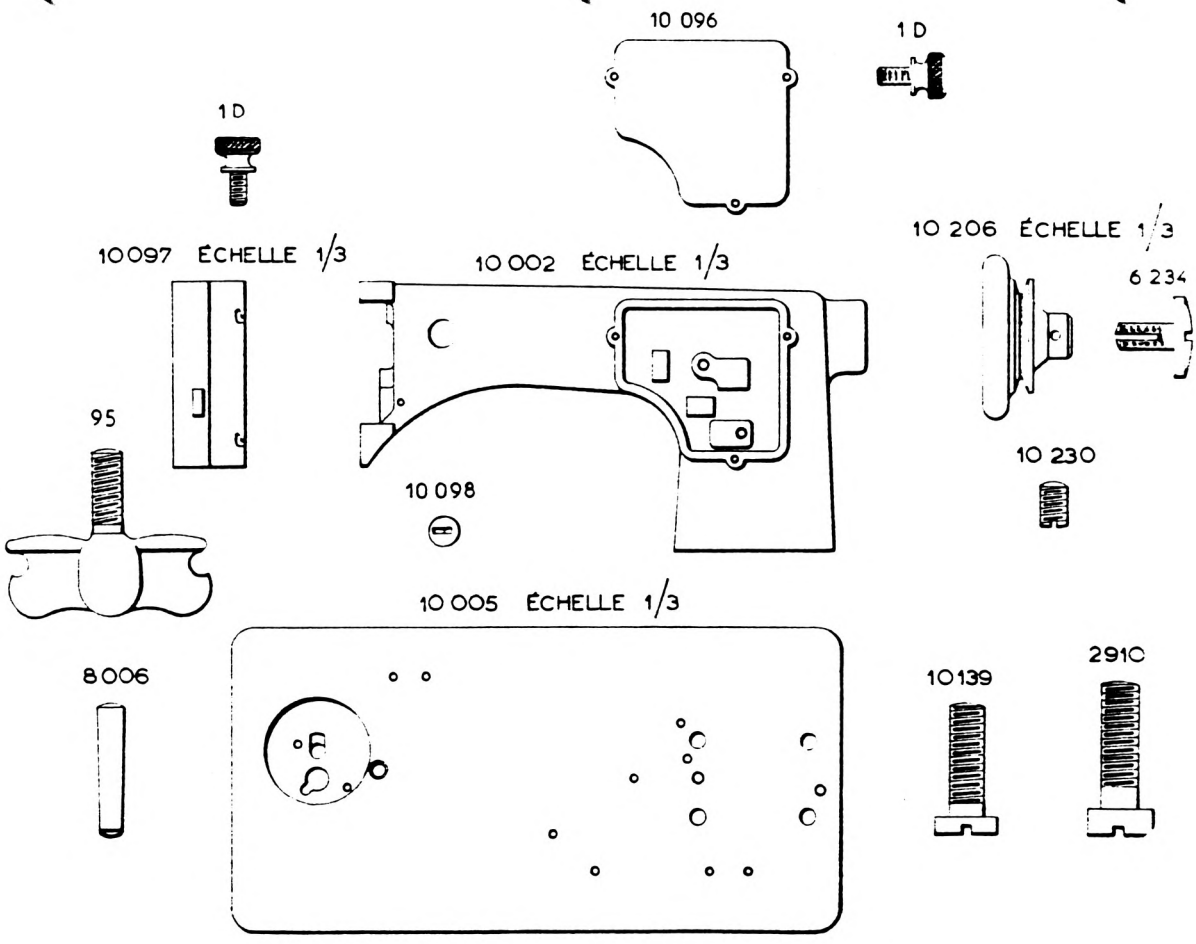
10 096
1 D
1 D
10097 ÉCHELLE 1/3
10 002 ÉCHELLE 1/3
10 206 ÉCHELLE 1/3
6 234
95
10 230
10 098
10 005 ÉCHELLE 1/3
8006
10139
2910

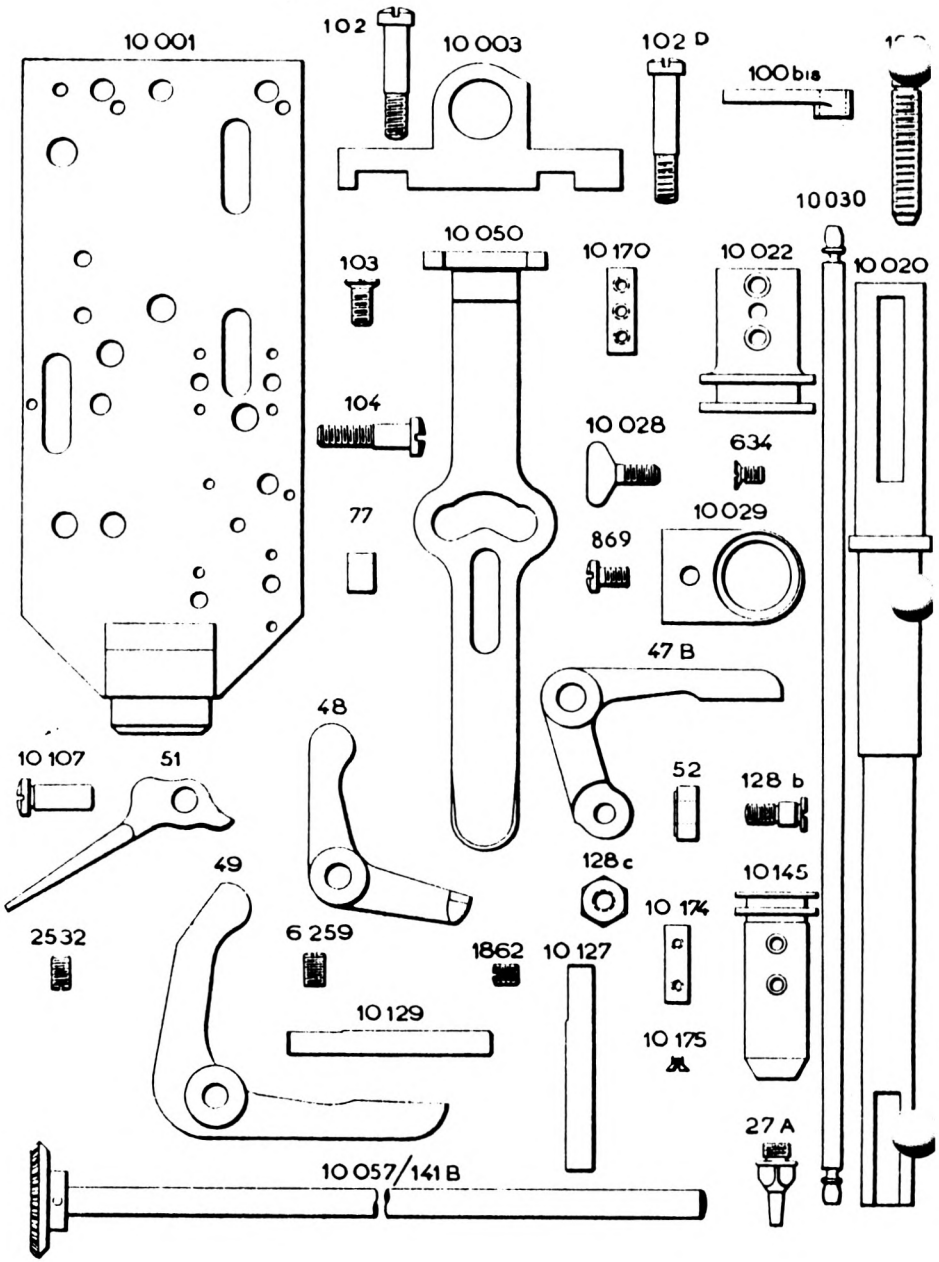
10 001
102
10 003
102 D
100 bis
10030
10 050
103
10 170
10 022
10 020
104
10 028
634
77
869
10029
47 B
48
10 107
51
52
128 b
49
128 c
10145
10 174
2532
6 259
1862
10 127
10 129
10 175
27 A
10 057/141 B

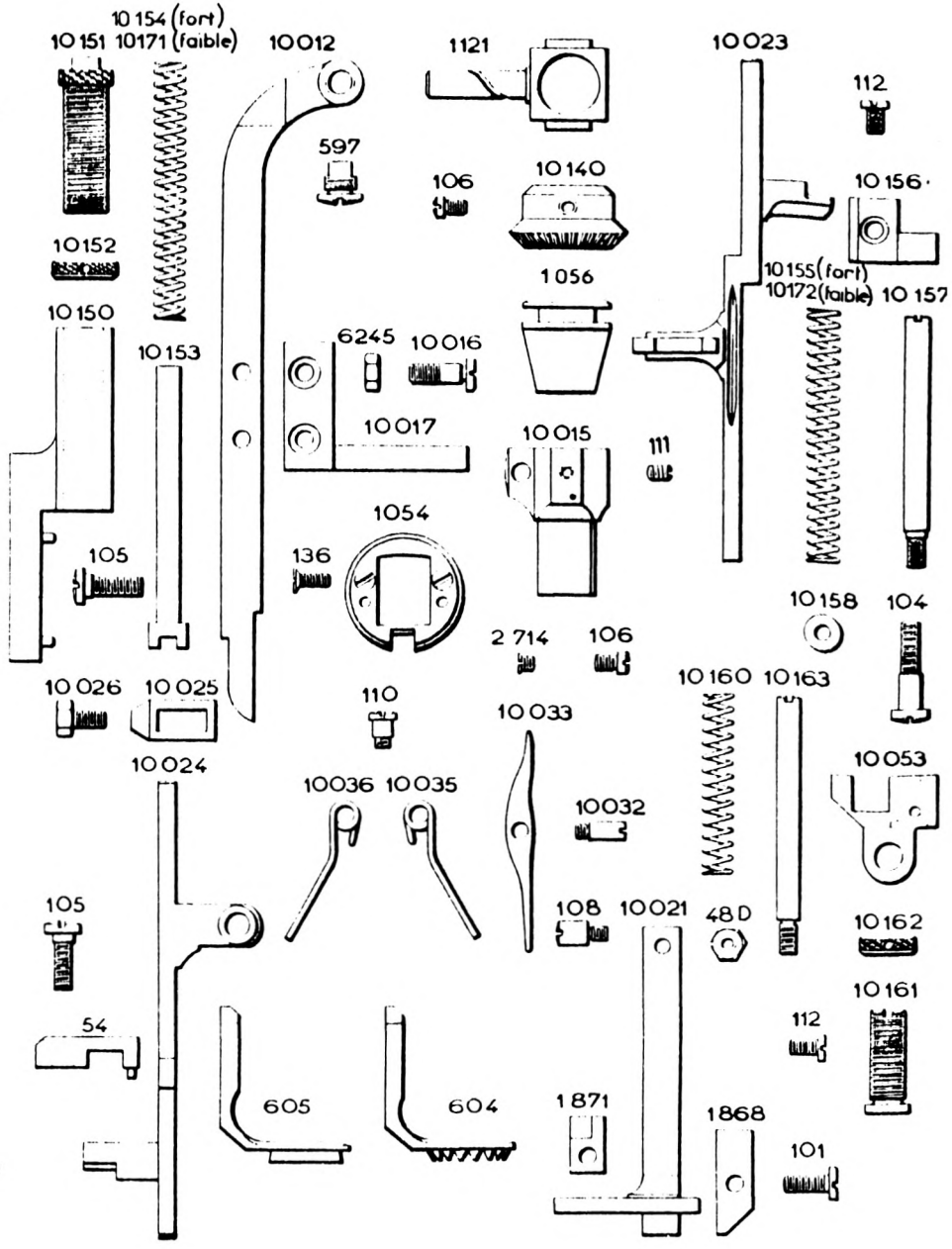
10 154 (fort)
10 151 10171 (faible)
10012
1121
10023
112
597
106
10140
10 156
10152
1056
10155 (fort)
10172 (faible)
10 157
10150
6245
10016
10153
10017
10015
111
1054
136
105
10158
104
2 714
106
10 026
10 025
110
10 033
10160
10163
10053
10024
10036
10035
10032
105
108
10021
48D
10162
10161
54
112
605
604
1871
1868
101

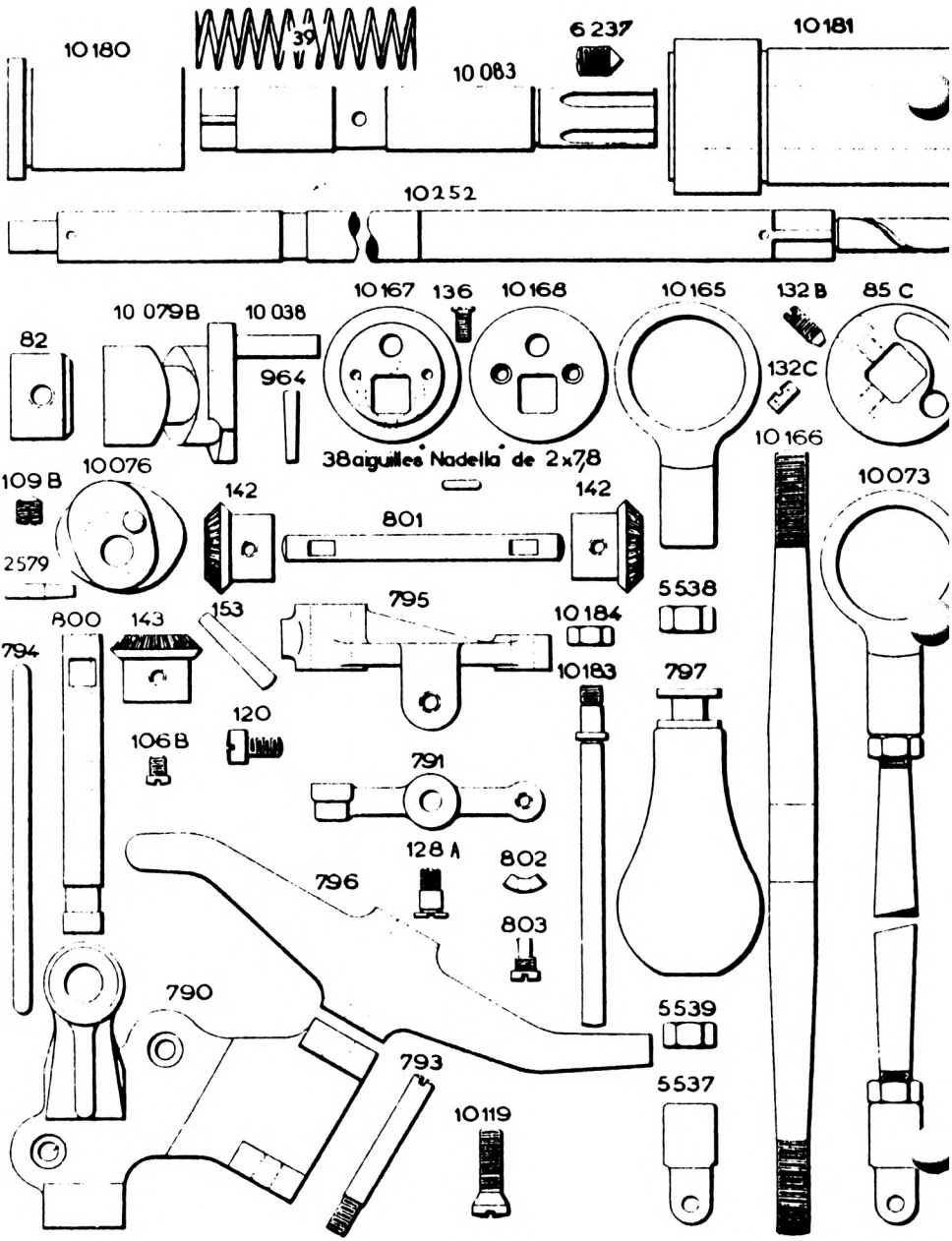
10180
39
10083
6237
10181
10252
10167
136
10168
10165
132B
85C
10079B
10038
82
964
132C
38aiguilles Nadella de 2x78
10166
109B
10076
142
801
142
10073
2579
5538
795
153
143
800
794
10184
10183
797
120
106B
791
128A
802
796
803
790
5539
793
5537
10119

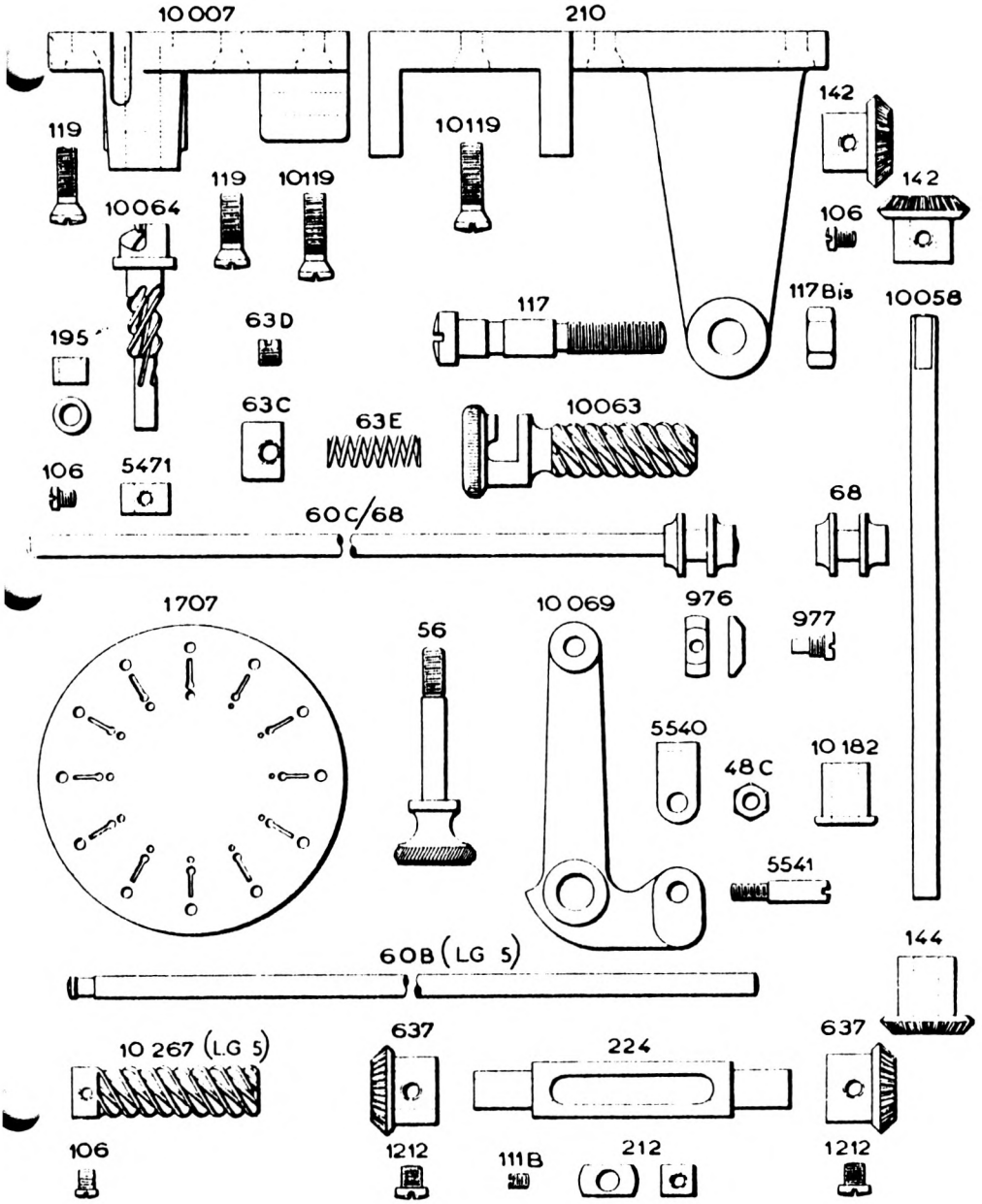
10007
210
119
10119
142
119
10119
142
10064
106
117
117Bis
10058
195
63D
63C
63E
10063
106
5471
68
60C/68
1707
56
10069
976
977
5540
48C
10182
5541
60B (LG 5)
144
10 267 (LG 5)
637
224
637
106
1212
111B
212
1212

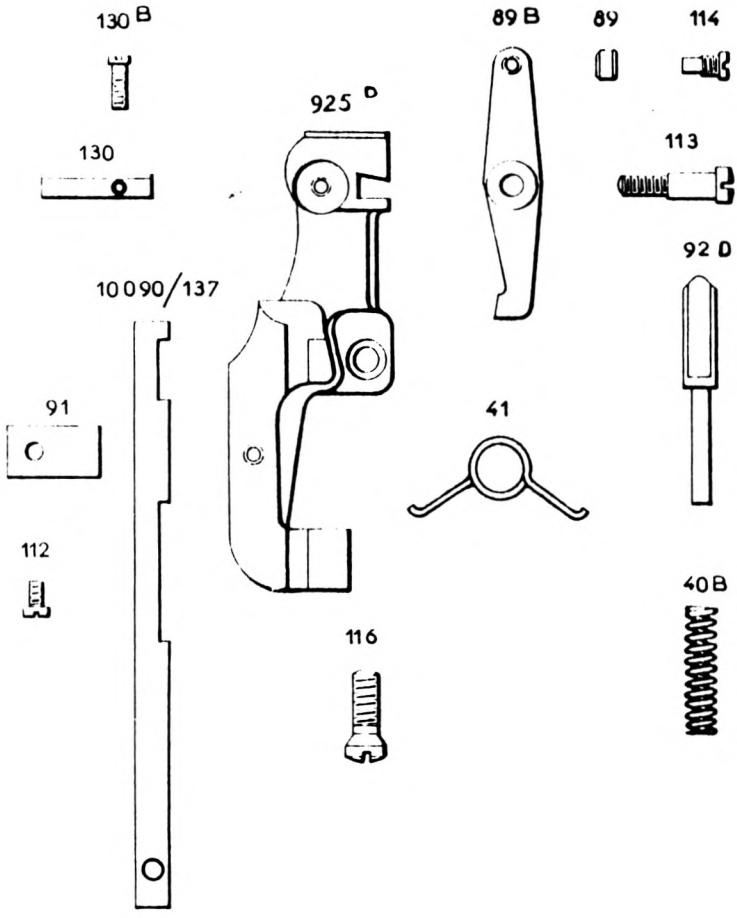
130 B
130
925 D
89 B
89
114
113
92 D
10090/137
91
41
112
40 B
116

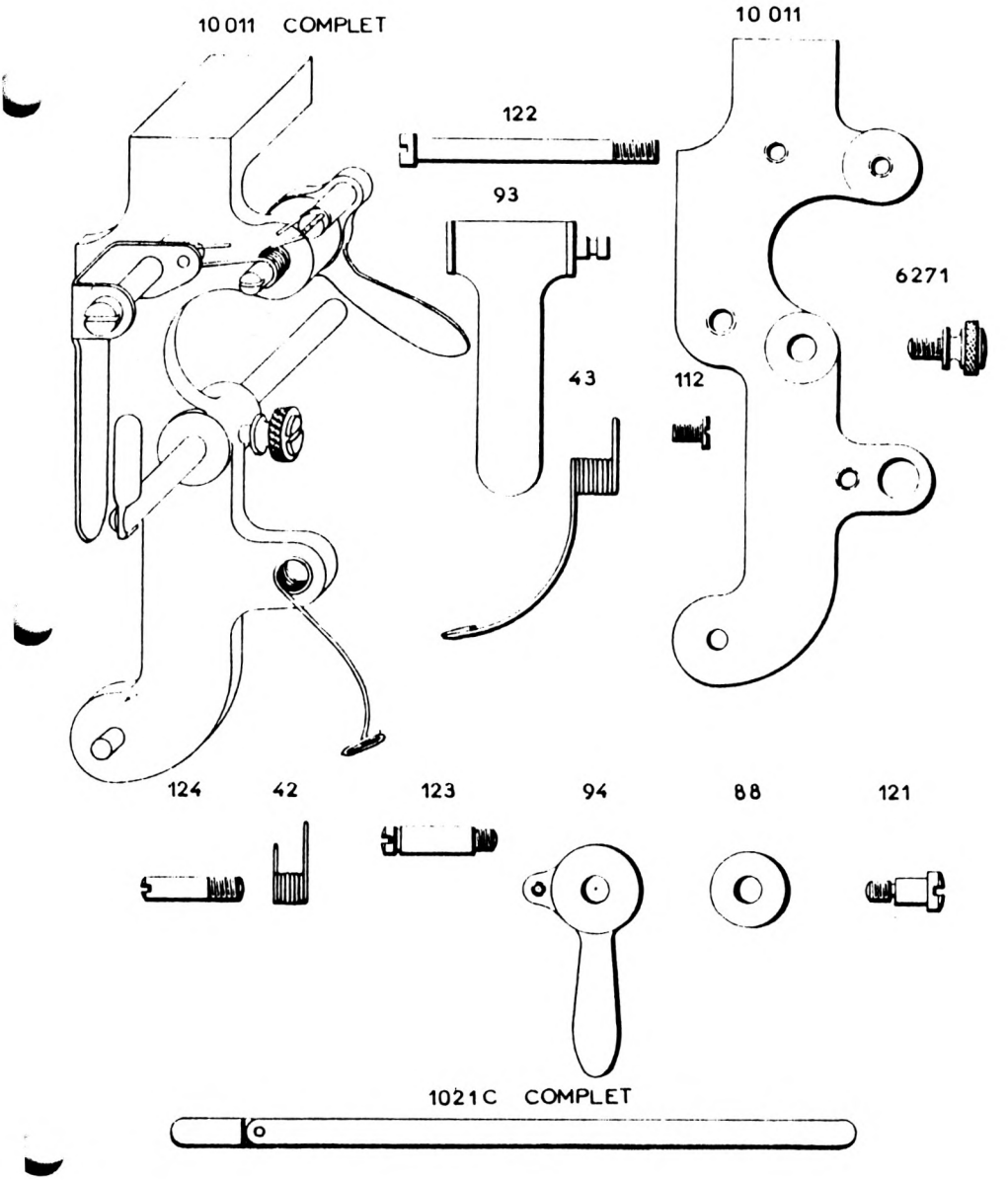
10 011 COMPLET
122
93
43
10 011
6271
112
124
42
123
94
88
121
1021 C COMPLET

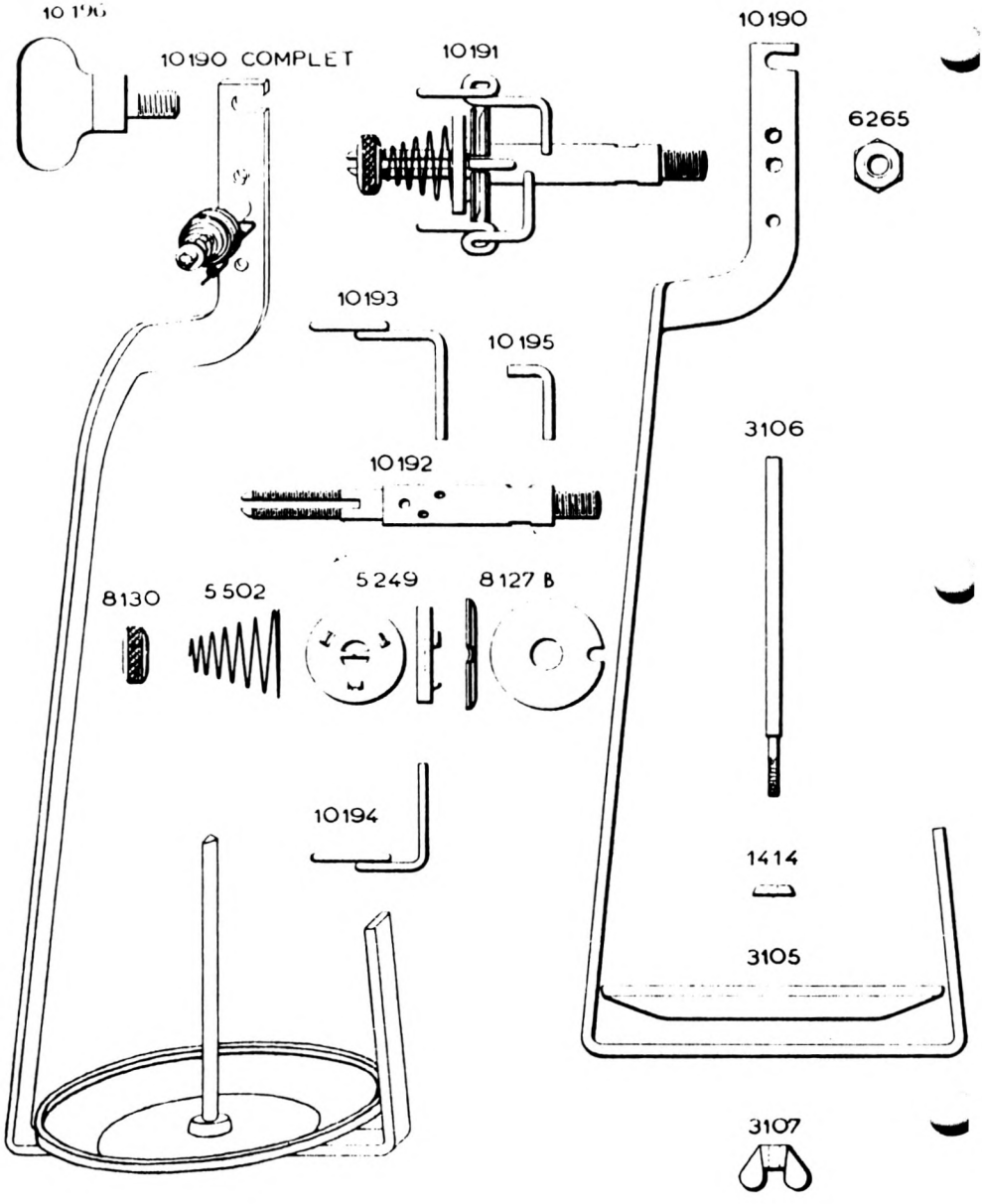
10 196
10190 COMPLET
10191
10190
6265
10193
10 195
3106
10192
8130
5 502
5 249
8 127 B
10194
1414
3105
3107

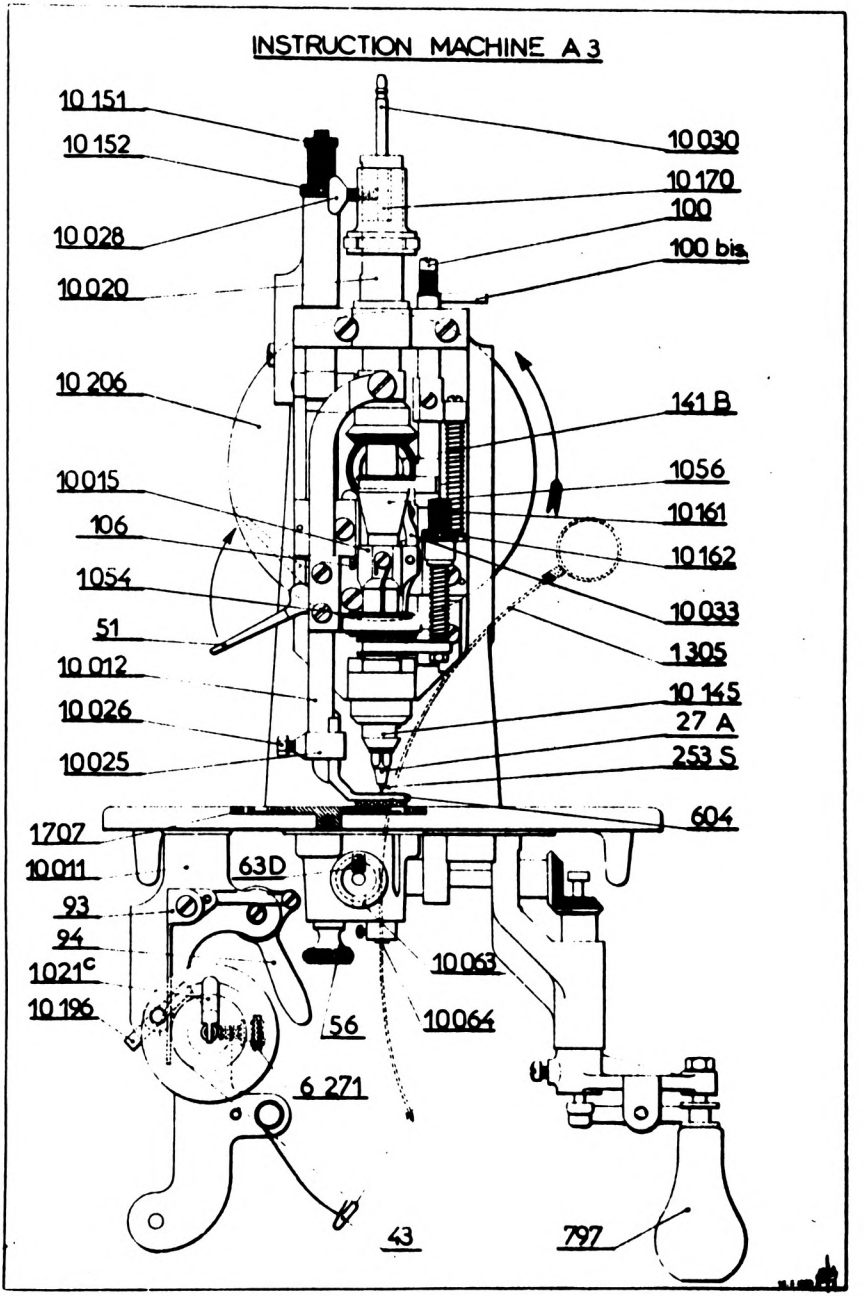
INSTRUCTION MACHINE A 3
10 151
10 152
10 028
10 020
10 206
10 015
106
1054
51
10 012
10 026
10 025
1707
10 011
93
94
1021c
10 196
63D
56
6 271
43
10 030
10 170
100
100 bis
141 B
1056
10 161
10 162
10 033
1305
10 145
27 A
253 S
604
10 063
10 064
797

In the up-coming chapters, I will try to give you the benefit of my forty-plus years in the embroidery business. I will tell you about the old ways that we did things back in the forties, as well as the newer ways of doing things that we use today . . . believe me, the newer ways are better!

The biggest mistake anyone can make is to refuse to learn new ways of doing things. Anytime you close your mind and are not willing to learn, I think you have just become your own worst enemy.

I include the old ways of doing things most of the time for the amusement value, not as the way something should be done.

In keeping with this, I would like to state that the new automatic computerized embroidery machines are a terrific addition to the embroidery business. I predicted back in the forties that they would be invented. Even though my Books & Video Training Tapes are about the hand-operated machines, I think you will find in todays market, you will not be able to survive in the embroidery business without going into automatic computerized embroidery.

However, I don't believe hand-machine embroidery will ever be completely replaced. There will always be the customer who wants that "one-of-a-kind" item, and is willing to pay a premium to get it!

Rather than do the hand-embroidery business any harm, I feel the automatic machines are a blessing in disguise. Back in the forties, when I started in the business, the minimum wage was $1.00 per hour! BONNAZ MACHINE OPERATORS were paid $3.00 per hour! For a while in the fifties, sixties & seventies, so many people got into the business, especially doing bowling shirts, that many operators were working for minimum wage just to have a job! They were considered "sewers," instead of "EMBROIDERY ARTIST." I hope this trend is over & people who learn to operate the machines by using my Books & Videos, will have confidence in their artistic ability and realize they are something special.

I would also like to point out to the shops that only do computerized embroidery that you are missing out on a very lucritive part of the embroidery business! People will balk at paying a high tape charge when they only want a small quantity of something, but . . . they are willing to pay a higher price to have it "CUSTOM" made. On the hand-operated machines, you don't need tapes! All you need is a drawing of the design to make a perforated pattern.

You will also find that when it becomes known that you offer CUSTOM MADE one-of-a-kind embroidery work in addition to your computerized work, your business will increase considerably.

You are able to charge higher prices for custom work and I hope you realize you will also have to pay more for a SKILLED EMBROIDERY ARTIST to do this custom work than you pay your operators that just stand there and watch the automatic machines do the work!

To the people that learn to be EMBROIDERY ARTIST, Don't sell yourself short! If an unscrupulous employer wants to pay you minimum wages . . . go to McDonalds and sell hamburgers . . . that is what you do for minimum wage! Not intricate art work that takes time and patience to learn, plus talent to do it!

I am speaking not only as an operator that has worked for many employers . . . I am also speaking as an employer who has had many operators work for me. To the employer who thinks he can cut his competitors prices by paying low wages to his operators, I will guarantee you that you will get what you pay for!

I have turned down many a job because there was not enough money in it to pay my operators a decent wage & cover my overhead. But, I have never suffered for a lack of work. I much prefer to have people working for me that feel they are a part of the business. When I pay them a decent wage, I also feel that I have more leverage when I insist on quality workmanship. In the long run, that quality workmanship is what will make your business successful.

P R I C I N G

How much should I charge for my work? That is the question I hear the most from students. It is also a question I can't answer!

What you charge depends on the prevailing prices in your area & what your overhead cost you and a number of other things must be taken into consideration.

If you try to have the lowest prices in town you are not doing yourself any favors, and you will probably price yourself right out of business! There are many hidden cost in any business, whether you are operating out of your basement or a 10,000 square foot store in a shopping mall.

If you start out in your basement by cutting other stores prices, plan on staying in that basement forever! It is O.K. to work at home but it is not necessary to cut prices to compete. The public is willing to pay prevailing prices for services and believe it or not they are suspicious when one shop has prices much lower than the other, They think there must be something they have not been told.

Later on in this book and in some of the others, I will go more into detail on pricing, but I have found that basically you must decide how much per hour your shop must take in to cover wages, overhead and allow you to make a profit. Some shops may have to make $100.00 per hour in a high priced area while others in a low rent district may get by on as little as $40.00 per hour. BUT . . . just because you have low overhead, this still don't mean you can cut the prevailing prices anymore than the guy with the high overhead can raise them. The public just wont go along with either scenario!

The best advice I can give you is to always make sure you don't loose money on a job. If you are not sure of how long something will take, tell the customer you will have to make a sample before you can give him a price. Then figure the price according to the time it takes. On one of a kind items, if the customer insist on an estimate before you begin work, figure high! It is better to not do the job at all than to loose money doing it!

To save you from making the same mistake twice, be sure to keep records on every job that you do. I keep this information on file cards so it is easy to get at.

Put a rough sketch of the job, then what all went into it. How many colors, outlining, and all the details. Write down how long it took to do each phase of the job. When a similar job comes in, you can refer to your card file before you quote prices.

Another way to figure estimates is by the inch. Estimate how many square inches of embroidery would be in a design, then figure how much per square inch you need to charge. If the average price in your area is $1.00 for a two inch block letter, then your price for designs should be .50¢ per square inch for simple designs, .75¢ per inch for average designs, $1.00 per inch for detailed designs and $1.25 per inch and up for more intricate designs.

H I S T O R Y

O F

" B O N N A Z "

E M B R O I D E R Y M A C H I N E S

This type of machine was invented in France in 1866 by a Mr. BONNAZ. The machine can be guided to sew in any direction without turning the material. The operator does this by guiding a handle under the machine to make designs or follow designs stamped or traced onto the material.

Very intricate embroidery work can be done by an experienced operator.

It may sound to you like this would be a very difficult machine to operate, it is a difficult machine to LEARN to operate . . . once you have learned, the machine is like a pencil to an artist. It will be a bit easier for you to learn if you stop and think about the first people who learned to operate them. Not only did they have to master that handle . . . there was no electricity at that time! They had to learn to guide the handle while also pumping their feet on a treadle! When you stop and think about that, learning to operate the machine now should be a "piece of cake!"

Bonnaz machines do all sorts of things, chain stitch and chenille plus other machines do cording, braid, sequins, feather stitch and many other decorative stitches.

All of the machines will do chain stitch & chenille. Chain stitch is the primary stitch the machine was designed to do, the other machines use the chain stitch to sew the cording, braid & other things to the material.

Mr. Bonnaz called his invention the "UNIVERSAL MOVEMENT MACHINE." I will explain more about how the universal movement works later on. Mr. Bonnaz needed financial assistance to manufacture and distribute his invention, so Mr. Cornely provided the financial backing and the two men formed a partnership.

The original machines had the name "BONNAZ" on the casting, but by 1889 the machines were made under the name of CORNELY. At the "EXPOSITIONS UNIVERSELLES," held in Paris in 1889 many of the CORNELY machines won prizes.

CORNELY became the leading manufacturer of these machines . . . and still is to this day!

Many other companies copied the universal movement and manufactured machines. Singer, Lintz & Eckhardt, Sherman-Blatz, Consew, Treasure and others.

On the original machines, the movement of the foot & nipple was controlled by scissor loop springs exposed on the front & back of the face of the machine. They raise & lower the foot & nipple to cause a walking action that makes the machine sew. It was difficult to adjust these springs to make the machine move properly. The Singer Company changed them to coil springs on a plunger and enclosed them in a tube with an adjustable tension screw at the top. All of the machines made since WW1 have these coil springs.

Another change in the machine was invented by the founder of Troy Thread Co. in Chicago. On the original machines, to change the looper setting from chain stitch to chenille, you had to loosen the set screw and reset it manually. Mr. Troy Invented the looper operating gear that is used on the machines since WW1. It has a collar & spring system with a notch at each end of a slot on the end of the gear.

You pull the gear to the left and turn it to the other notch to make the switch. Complete instructions on timing the machine and doing chenille are shown in detail later in this book, including instructions for the older machines.

In one-hundred and twenty-two years, the two changes that I mentioned, are the only major changes ever made in the "BONNAZ MACHINE!" I think that is remarkable! Not only has there been so few changes, the machines made one-hundred & twenty-two years ago are still running! I have several that are well over fifty years old!

HOW THE MACHINE WORKS

The chain is formed by the needle (hook) going down through the nipple then through the material into the looper. The looper turns in a clockwise motion & loops the thread onto the hook of the needle. The needle pulls the thread up through the material into the nipple. The foot moves the material forward and the process is repeated.

A walking action is created between the foot & nipple. When the foot is raised, the nipple is down holding the material, then as the nipple raises, the foot comes down and moves the material.

It is Impossible for the operator to sew her finger on the Bonnaz machine, as can be done on other sewing machines . . . but watch out for that foot, it can bite!

This particular Book is devoted to the CHAIN STITCH MACHINES. I have also written books on the other Bonnaz machines, and a book about hand-machine monogramming and satin stitch work. Another book teaches you to be your own mechanic and two others teach you to be an artist and furnish you with all of the different styles of lettering, logos, small designs and all of the different styles of monogram designs. You will find a complete list & order form for all of the ARTISTIC TOUCH BOOKS & VIDEO TRAINING TAPES in the back of this book.

WHAT THE MACHINE DOES

The usual method of producing designs is to follow a pattern that has been perforated and then stamped onto the fabric. The design can also be traced or drawn onto the fabric. With practice, the operator can produce names and some free-hand designs with out pre-marking the material. Designs can be produced in one color or in multiple colors with a variety of different threads.

The chain stitch machine is not recommended for very small intricate designs, although they can be done. These are best done on the satin stitch machine.

Block lettering done on the chain stitch machine should be at least 1/2 inch in height. Designs can be whatever size you wish. Large letters and designs with large filled in areas can be accomplished in shorter time with less work on the chain stitch machine than on the satin stitch machine.

L E A R N I N G T H E

N A M E S O F T H E P A R T S

The parts list and diagrams were put at the beginning of the book to make it easy for you to look up the parts on the machine as I refer to them in the lessons. When I mention a part, it will be written in CAPITOL LETTERS. Stop & find the part on the diagram, then find it on your machine. Try to remember what it is called.

The parts list & diagrams have a reference number so you can find the part & the part number. As much as possible I will refer to the parts by the proper name for the part.

I feel it is very important that you know the names of the parts and where they are located on the machine. Some training manuals refer to parts as part "A" or part "B", I feel that this assignment of letters only leads to confusion.

Y O U R C H A I R

Why am I telling you about your chair when you want to learn to operate the machine?

When operating the Bonnaz machines, the placement, height & type of chair that you use is very important. You, as the operator, are an extension of the machine. If you are out of alignment with the machine, you can not guide it properly.

When you sit at the machine, you should be positioned so that when you place your hand on the handle and pull it toward you, your arm should be in a straight line from your elbow to the handle.

In addition, the chair should be low enough that your arm is level from the handle to your elbow. After you have worked on these machines for a while, you will see that sitting on a chair that is too high can cause back pains. Get a wooden chair and saw the legs off, very carefully, so you have the proper height for you. This is usually about 2½ inches shorter than a normal kitchen chair.

S P E E D

While learning to operate the machine, it is best to go slow, about 600 stitches per minute, or less. When you have become more advanced, you may find that the factory has limited the speed of your machine by the size of the pulley on the motor. For best results and so you can make money, the machine should be capable of producing about 2,000 stitches per minute. This can be accomplished by changing the pulley on the motor. On clutch motors, change to a larger pulley. On motors with a separate clutch, change to a smaller pulley.

You can increase the speed beyond the machines capability, if this happens, the machine will stutter and start sewing backwards at top speed. If your machine does this, decrease the speed by changing the pulley.

P A N T O G R A P H

O R

U N I V E R S A L M O V E M E N T

I mentioned before that Mr. Bonnaz called his invention the Universal Movement Machine. The gear system of the machine from the handle to the FACE & LOOPER is designed on the same principle as an artist pantograph. This is a tool that can be purchased at any art store. It is used to enlarge & reduce the size of a piece of art work.

The pantograph is comprised of four pieces of wood or metal of equal length, joined together at equal distances to form a square. The opposite ends contain a stylus to follow the design and a lead holder to reproduce the

design. (see diagram below) It is attached to a table at point "C".

When you follow the design at point "A", the design is reproduced as an enlargement at point "B". Reversing the process will make a reduction.

The Bonnaz machine works on the same principle. The handle is at point "A" and the needle at point "B". By guiding the handle in the direction you want to go, the needle, nipple & foot will reproduce what the handle is doing below.

Note: Unlike the pantograph monogram machines that also work on this principle, the art work is not at point "A". The handle of the Bonnaz machine is at point "A" and the art work is stamped onto the fabric.

D E S I G N O F A P A N T O G R A P H

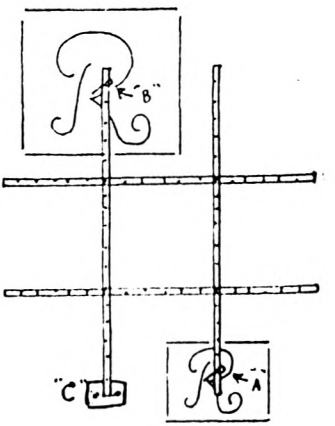

My purpose in showing the pantograph is not the pantograph itself, although it is a very useful tool in the embroider business. My purpose is to show the similarity between the pantograph and the Bonnaz machine.

L E A R N I N G

T O

O P E R A T E T H E M A C H I N E

Most people start out by trying to force the material to move in the direction they want to go, with their left hand. This is not necessary! The machine will move the material for you. All you need to do is guide the handle under the machine with your right hand! While you are practicing, it would be best if you put your left hand in your lap or behind you . . . anywhere except on the material you are practicing on!

After you have learned to control the machine, you will use the left hand in unison with the right to keep the material moving properly and to do better work, but to start with, your left hand will just be in your way and it will be more of a detriment than a help.

To make your beginning practice easier and to keep you from breaking your needle, loosen the NEEDLE HOLDER CLAMPING SLEEVE THUMB SCREW that holds the NEEDLE HOLDER (also called needle bar) IN THE MACHINE. Remove the NEEDLE BAR. Be sure to tighten the SCREW to prevent it from falling out or breaking while you are practicing.

Remove the thread, if it is threaded, by pulling the thread back down under the machine. Don't get worried, I will show you how to put the NEEDLE BAR back and how to thread the machine later. For now, this is for the safety of your machine.

Before you start practicing, there is another thing that we must check out . . .

S T O P M O T I O N M A C H I N E S

If you have a machine that is equipped with a STOP MOTION, in order to make the machine sew, you must pull down on the HANDLE as well as put foot pressure on the TREADLE while you are sewing. When you release the downward pull on the HANDLE, the STOP MOTION will stop the machine even

though you are still pressing on the treadle with your foot.

The STOP MOTION was necessary back before Thomas Edison brought us electricity. The machines were powered by the operator pumping her feet on the treadle. It is impossible to stop a treadle machine quickly, they always make about six more stitches after you stop pumping. The STOP MOTION is a carry over from the past that should have been dispensed with, but the manufacturers still put them on even though the electric motors are equipped with a brake so the machine stops as soon as you let up on the treadle.

I won't pull any punches on this, I strongly dislike the STOP MOTION. I don't think the operator has complete control of the machine with them, and as a mechanic, I don't believe they are good for the machine.

I will also be honest and tell you that Christine Dichamp, the owner & President of the Cornely Company disagrees with me on this. She likes the STOP MOTION just as much as I hate them.

If you would like to try it MY WAY! You can remove the STOP MOTION very easily. Remove the SIDE ARM COVER of your machine. You will see the parts inside the ARM. It is best to remove the entire assembly NUMBER 25 on the parts diagrams. Or you can just remove the SPRING number 8084 and the STOP CAM ROCKING LEVER number 8075.

With the STOP MOTION removed, your machine will sew when you step on the treadle and stop when you raise your foot.

There are some good points also. You can let up on the handle to make turns especially when doing block lettering, but . . . even though this makes for nice square corners, it also slows down your production. If your machine is adjusted properly you can make square corners on block letters without the STOP MOTION.

Later on, after you have learned to operate the machine, try both ways and then decide for yourself.

BECOMING ACQUAINTED

WITH THE MACHINE

To start practicing, you must first become acquainted with what the machine is supposed to do.

Start by using paper towels or even two sheets of typing paper to practice on. With the NEEDLE & thread removed, the NIPPLE will make little round marks on the paper so you can see what you are doing.

Raise the FOOT with the LIFTER located at the rear, lower section of the ARM HEAD. Place two pieces of paper under the FOOT and lower the LIFTER.

The column of parts where the NEEDLE BAR is located is called the "FACE." In the center of the column of parts, you will find a part called the FEED LEVER. The common name for this part is the "NOSE."

Place your right hand on the handle and turn it slowly. You will see that when you turn the HANDLE to the right, the NOSE also turns to the right. In fact, whatever direction you turn the HANDLE, the NOSE points in that direction. This is why operators call the FEED LEVER the "NOSE," whatever direction the NOSE is aimed is the direction the machine will sew.

Without turning on the power switch, PUSH the wheel away from you with your right hand. As you turn the wheel, watch what the machine is doing. (The wheel will turn easier if you put a slight pressure on the treadle, this releases the brake)

Now, turn the HANDLE in different directions as you do this and watch how the machine is moving in the direction the NOSE and HANDLE are pointing.

Now that you are familiar with what the machine is doing, turn on the power switch and slowly press your foot down on the treadle much the same as you would press on the gas peddle of an automobile.

When you start practicing, if you can manage to just stay on the paper . . . you are doing good! Work on trying to gain control of the TREADLE. Practice adjusting the speed as you are sewing to whatever speed you want.

Eye hand and foot co-ordination are necessary for you to control the machine. Keep working on your foot control until you can start & stop smoothly . . . plus slow down and speed up at will. You will do best by just using your right foot.

Try to make circles, one after the other and get them to go in the direction you want to go. (see example on page 53) Practice doing this until you can outline the outer edge of the paper about one inch in, then follow that outline around until you have covered the paper with circles ending in the center.

When you have mastered this, start trying to write your name. Keep practicing without the NEEDLE and thread until you are just about bored to death! Try to gain some confidence and control before you proceed.

REPLACING THE NEEDLE BAR

When you put the NEEDLE BAR back into the machine, turn the HANDLE toward you. Make sure you have the NOSE facing toward you. Loosen the SCREW and insert the NEEDLE BAR into the machine with the OPENING IN THE HOOK facing toward you.

Lower the NEEDLE BAR into the machine until the hook is just visible below the NIPPLE when the NIPPLE is at the highest point. (Get the NIPPLE to the highest point by turning the wheel and watching it raise.)

Tighten the SCREW as tight as you can get it with your fingers, then tighten it just a slight bit with a pliers. Be very careful not to over tighten it. If you break the screw it is a major repair job to replace it.

The size of the chain stitch is adjusted by raising the NEEDLE for a fuller stitch. Lower the NEEDLE for a tighter thinner stitch.

Try to copy this example, it is good for hand, foot and eye co-ordination.

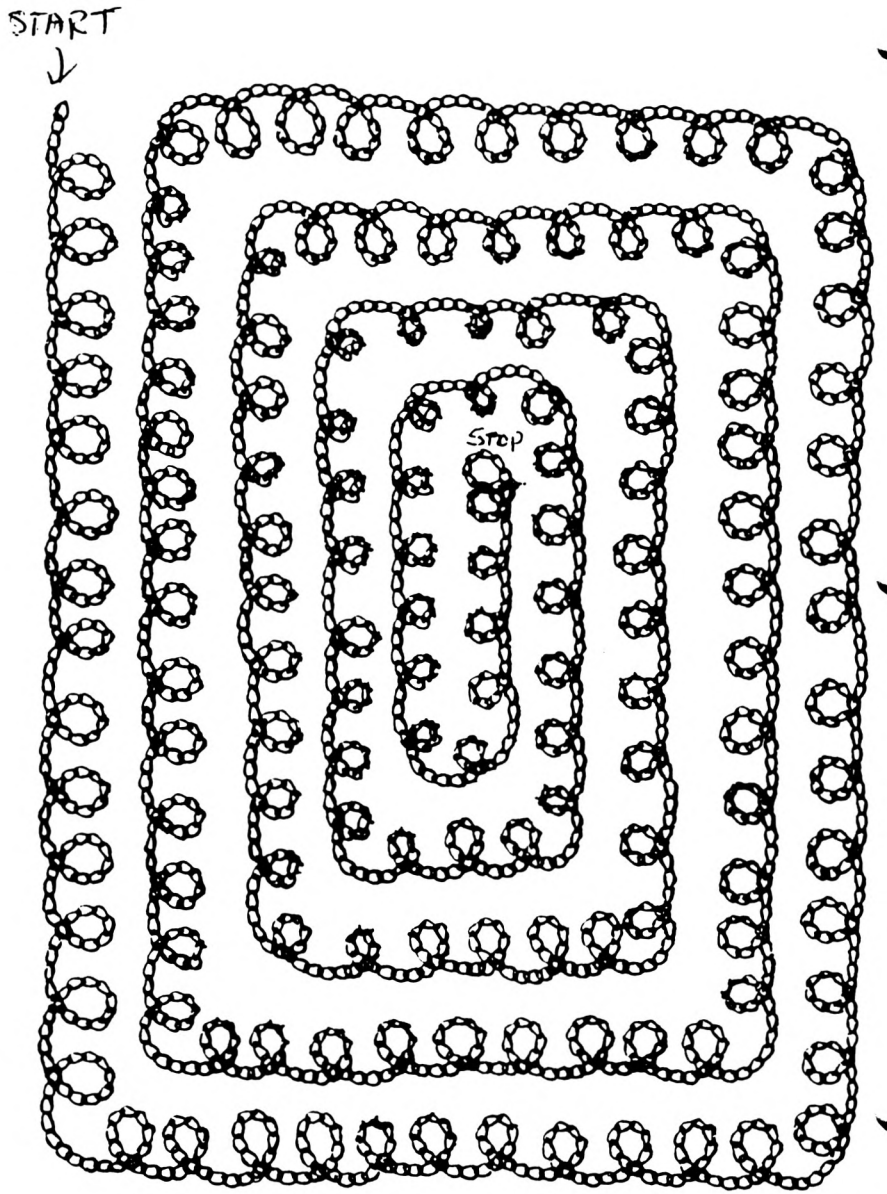

After you have the NEEDLE BAR back in the machine, before you start trying to sew, check to see that you are using the correct NEEDLE PLATE HOLE. If you are using the #5 NEEDLE, you should be using the fifth hole in the NEEDLE PLATE. Count from the smallest hole.

If you need to change to a different hole, loosen the NEEDLE PLATE THUMB SCREW under the machine. Turn the plate until the correct hole is under the NIPPLE.

Turn the wheel by hand until the NEEDLE is just entering the NEEDLE PLATE. Turn the HANDLE in a complete circle, watching to see that the NEEDLE is entering the hole in the center and is not touching the NEEDLE PLATE at any point. If the NEEDLE is touching the NEEDLE PLATE, the thread and even the NEEDLE will break as you are sewing.

If the NEEDLE keeps touching the NEEDLE PLATE, the NEEDLE may be bent in the NEEDLE BAR. Take the NEEDLE BAR out of the machine and roll it on the table. If the NEEDLE makes an arch as it rolls, find the spot where the arch is the highest. Move the NEEDLE BAR so the NEEDLE is off the table and press down on the NEEDLE with your finger. Keep doing this and re-checking it until the NEEDLE is perfectly straight. be careful not to break the NEEDLE while doing this.

A NEEDLE PLATE HOLE that is too large will make the NEEDLE snag the material and make it pucker.

A NEEDLE PLATE HOLE that is too small will break the thread and even the NEEDLE.

N E E D L E S & N I P P L E S

Needles are part number 5901 (Singer 137 X 1) Cornely 253. Singer needles come in sizes 1 to 12 or 70 to 180 metric. Cornely needles come in sizes 0 to 16 or 60 to 260 metric.

The smaller the needle size, the smaller the hook. This is the only part on Bonnaz machines that is interchangeable.

Needles are also made by several other companies. The size is marked on the shank. Some companies use the metric numbers. The regular sizes and the metric equivalent are shown below.

Regular number	0	1	2	3	4	5	6	7	8	9	10
Metric number	60	70	80	90	100	110	120	130	150	160	170

Regular number	11	12	13	14	15	16
Metric number	180	190	200	220	240	260

The Singer instruction book tells you to use the same size needle & nipple. Cornely tells you to use the next larger size. If you follow the Cornely instructions with ALL MACHINES, you will have less problems.

The chart below will give you an idea of the size NEEDLE, NIPPLE & NEEDLE PLATE HOLE I use with different threads. In general, you need to use smaller sizes when using finer thread and larger sizes when working with heavy thread.

THREAD	NEEDLE	NIPPLE	PLATE HOLE
600 denier rayon	5	6	5
SUISSE "C"	5	6	5
MERCERIZED 20/2	5	6	5
WOOL	6	7	6
ORLON	6	7	6
METALLIC	5	6	5
SUISSE "B"	4	5	4
RAYON 00/2	3	4	3
MERCERIZED 0000	3	4	3

There are exceptions to all rules, you may need to make changes depending on the condition of your PLATE, the material and other things.

CHANGING THE NIPPLE

Anytime you change the size of the needle, don't forget you must change the NIPPLE & NEEDLE PLATE HOLE also.

To remove the NIPPLE, you must raise the NEEDLE BAR so the NEEDLE is above to NIPPLE. Use the NIPPLE WRENCH to remove the NIPPLE from the NIPPLE CARRIER.

Replace the NIPPLE with the desired size and be sure to tighten the NIPPLE as far into the NIPPLE CARRIER as it will go.

When you lower the NEEDLE, don't forget the hook must be facing forward in alignment with the NOSE.

LEFT HANDED OPERATORS

People who are left handed can learn to operate the Bonnaz machines, but . . . they have to use the right hand. Most of them start trying to figure how to redesign the machine, sorry, it wont work. You can learn to work with your right hand and I have been told it is really no bigger problem for lefty's to learn than right handed people. Over the years in the school, I have found this to be true.

MORE PRACTICE

With the NEEDLE back in the machine, practice the same things as before. Don't thread the machine yet. Keep practicing until you have no places in the paper where you are making slits in the paper by fighting the machine with your left hand. You should just have little round holes in the paper.

Practice writing your name and the alphabet as small as you can get it. When you have accomplished this, go on to the next step.

Slowly turn the HANDLE while looking into the hole in the NEEDLE PLATE just in front of the hole under the NEEDLE. You will notice the EYE OF THE LOOPER as it turns past the hole. It is very important that when you place the THREADER WIRE into this hole, the EYE OF THE LOOPER is turned OUT OF THE WAY!

You will be using the THREADER WIRE quite often. To keep from misplacing it, tie it to a piece of twine about 12 to 15 inches long, then tie the other end to the ARM SIDE COVER THUMB SCREW. Some operators drill a small hole in the machine table just to the right of the machine and they keep the THREADER WIRE in the hole. Either way, the THREADER WIRE will always be where you can find it.

Turn the wheel so the NIPPLE is raised. Place the THREADER WIRE into the hole in front of the NEEDLE HOLE in the NEEDLE PLATE. This is called the THREADER HOLE. Push the wire down as far as it will go.

With your left hand, take the thread where it is coming through the THREAD CONTROLLER SPRING. Hook the thread onto the notch in the end of the THREADER WIRE. Pull the THREADER WIRE with the thread attached back up to the top of the machine.

Hold a slight tension on the thread with your left hand & turn the HANDLE one full turn clockwise. This puts the thread into the EYE OF THE LOOPER. End with the HANDLE & NOSE aimed away from you to the back. While still holding a slight tension on the thread with your left hand, turn the wheel with your right hand until the needle picks up just one stitch. (so you will remember which way the wheel turns, think PUSH, if you PULL the wheel that is the wrong way.)

The object now is to have just one strand of thread coming from the NEEDLE HOLE. This can be accomplished two ways. You can hook the thread with the THREAD KNIFE and pull it or you can pass the THREADER WIRE under the needle from

the back to the front toward you. If you have done this right, the machine will now make a chain stitch.

Some of the old machines will not pick up the thread unless the thread is coming from the threader hole into the slot in front of the hole. If you have one of these old machines, get into the habit of passing the THREADER WIRE under the FOOT so the thread will go into the slot. The needle will pick up the stitch now.

Before you start sewing, turn the wheel by hand for a few stitches so you can see what the machine is going to do. You may need to raise or lower the needle, or tighten or loosen the tension.

Practice threading the machine over & over again until you can do it quickly and easily. You are going to do this quite often from now on! When you start sewing, don't forget to put the FOOT down.

Until you become more acquainted with the machine, you will have problems with the thread breaking and slipping out of the looper when you break off. When this happens, the machine looks like it is threaded . . . but it wont sew. Just re-thread the machine. Don't become upset about this, it is normal. As you become more experienced, these problems will stop.

H O W T O B R E A K O F F

Each time you complete a letter or name, it is necessary to break off the thread to move to the next letter or name. This means on the average bowling shirt, you will have 15 to 20 break offs. You should learn to do this fast & easy. In addition, a good operator will always try to break off at the same place on letters as much as possible. This is in consideration of the person who will be doing the trimming . . . usually you!

Get into the habit of stopping the machine with the handle aimed away from you slightly to the right of center.

with your right hand, turn the wheel so the needle is up and the nipple is at the highest point. Reach under the machine with your right hand, pull the thread between the THREAD CONTROLLER SPRING and the LOOPER so there is about an inch or so of slack. At the same time, with your left hand, pull the material slightly to the left toward you. When the thread is about two inches long from the last stitch to the needle, place the index finger of your left hand on the last stitch and pull against the needle. With your right hand, PULL the wheel back toward you (this is the only time you PULL the wheel) Just PULL the wheel about one-quarter turn. The thread should break and you are ready to move to the next letter.

This may sound confusing so I will explain what is happening. When you hold the thread tight pulling it away from the needle then PULL the wheel back, the machine tries to pull the thread up into the nipple. Since you are holding the thread so it can't do it, the thread breaks.

Practice breaking off over & over until you can do it fast and easy . . . you are going to be doing it a lot.

" E M B R O I D E R Y A R T I S T "

You have learned how the machine works, what the machine does, the names of some of the parts, where & how to set, about the speed & pulleys, the pantograph principle, the stop motion, the "NOSE", how to control the treadle, how to choose the plate hole, nipple, needle and thread. How to thread the machine and how to break off. If you have been practicing as instructed, by now you should have control of the machine well enough to write names & do the upper & lower case script alphabets. There is a lot more to learn, but you are well on your way to becoming an "EMBROIDERY ARTIST."

The Bonnaz machines, in my opinion, are the top of the line of hand-operated machines . . . the CADILLAC of sewing machines!

As you put more time and effort into learning & sharpening your skills, please remember, you are not a "SEWER" or

just a "sewing machine operator" . . . you are an "EMBROIDERY ARTIST."

I give you permission to use my favorite line when people ask you to do things like hem dresses and sew on buttons. I tell them, "That is like asking Rembrant to paint your bathroom!"

M A I N T E N A N C E & O I L I N G

The Bonnaz machine is probably the most durable piece of machinery ever made. Many machines well over one-hundred years old are still in use. This could be due to the care they receive from the operators. Most of us acquire an "EAR" for the machine. When something sounds different, we start looking for the problem. During my years in the business, I have seen operators work at high speeds for long hours, but I don't ever remember seeing an operator abuse a machine.

When you oil the machine, do it sparingly. Use a good twenty weight non-detergent motor oil. I believe you are smart enough to oil the machine without a book to show you. Every moving part needs a slight coating of oil.

To oil the parts on the "FACE" put the oil on your finger and rub it into the part as you turn the handle. If you get too much oil on the "FACE", the machine will wait until you are working on a white satin jacket . . . then spit all of that oil back at you!

Don't forget to oil the motor, if you have one that needs oil. Turn the machine back on the hinges and oil the parts under the machine also.

C L E A N I N G

About once a week, remove the needle bar, foot, nipple & plate. Use the CLEAN OUT BAR to push all of the accumulated lint, dirt & debris out of the NEEDLE SHAFT.Put a drop of oil into the NEEDLE SHAFT when you are done. You will really be surprised at how much accumulates in the NEEDLE SHAFT.

Use a straight pin to clean the dirt out of the NIPPLE, then put one drop of oil into it.

To clean the LOOPER, put at least 15 to 20 drops of oil into it. Hold a paper towel under the LOOPER to catch the dirt & debris & oil. Run the machine while adding oil and wiping away the mess until the oil runs clean.

Replace all of the parts as they were before. When you replace the FOOT, be sure to get the CLAMP as high as it will go.

About once a year, do all of the steps above . . . plus spray all of the moving parts, above & below, with WD-40. Run the machine for several minutes at full speed, then wipe away all of the oil that you can. Re-oil the machine with the regular oil.

THREAD PROBLEMS

Occasionally, you will have problems with the thread breaking or fraying while you work. This can be caused by several things.

a. Be sure the needle is not hitting against the plate.
b. See that the needle is in the needle bar straight.
c. Be sure you are using the right size needle & nipple.
d. See if the needle is bent or damaged.
e. See if the thread has looped around the thread controller spring or one of the eyelets under the machine.
f. Check your tension.
g. See if there is a place on the cone where the thread has been tied that is causing the problem.
h. If all else fails, change the needle even if it looks O.K.
i. Clean the machine.

Sometimes, you have problems with the Rayon and Metallic thread coming off the cone too fast and bunching up on the eyelets. Run the end of the strand of thread down through the center of the cone from the top to the bottom. (see diagram on the following page) Cut a notch in the bottom side of the cone as shown. Run the thread through the

notch and then into the eyelets. This will keep the thread rolling off the cone smoothly. be sure to remove any rough edges on the notch you cut into the cone. This system is not necessary when working with mercerized thread and it will not work with the large cones of wool or orlon thread.

The diagram shown below will show you how to set up the thread cone for this method.

HOW TO TANGLE PROOF THREAD CONES

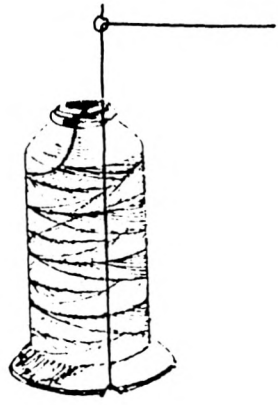

H O W T O

C H A N G E T H R E A D C O L O R S

When you change from one color to another, do it the fast & easy way . . . Just break off the thread at the cone you are using. Tie the end to the new color and pull the thread through until the new color comes up.

I have seen operators re-thread the entire machine every time they change colors . . . my time is more valuable than a six foot long piece of thread.

H O W T O A D J U S T

T H E L E N G T H O F T H E S T I T C H

On the top, front of the ARM HEAD, you will find the FEED REGULATING SCREW & LOCK NUT LEVER.

Pull the lever toward you to loosen it. For a shorter stitch, turn the screw into the machine a few turns. For a longer stitch, turn the screw out a few turns. Be sure to tighten the LEVER when you are done. Be careful not to completely remove the screw . . . you will have a heck of a time getting it back in correctly. Don't worry about this too much, the screw is almost two inches long so you have a lot of leave way before you have a problem.

H O W T O A D J U S T T H E F O O T

In order for the machine to move the material properly as you sew, the pressure on the FOOT must be adjusted correctly.

First check to see if it needs to be adjusted. Place one piece of typing paper under the FOOT and put the foot down. Use the FOOT with the RUBBER SHOE on it.

Turn the wheel by hand until the NIPPLE raises to the highest point. This will put the FOOT at the lowest point. Try to pull the paper toward you. You should be able to just barely pull the paper without tearing it.

If you can't move the paper, the FOOT needs to be raised. If the paper moves too easily, the FOOT needs to be lowered.

There are TWO adjustments on the machine that control the movement & pressure of the Foot.

FIRST, remove the PRESSER FOOT SLIDE BAR THUMB SCREW & NUT from the back top of the ARM HEAD. Place the NUT so it is about one-half way on the threads of the SCREW. Put it back into the machine and just screw it down to where the NUT is.

Check the FOOT pressure again with the paper as I told you to do before.

If the FOOT is too high or too low, turn the wheel by hand until the FOOT has raised above the paper BUT, BE SURE the NIPPLE is not touching the paper.

On the front side of the ARM HEAD, you will find a hole about one-half way down. Insert a small screw driver into the hole and loosen the set screw. Don't remove the screw, but be sure you do loosen it.

Just to the right of that set screw you will find the PRESSER FOOT SLIDE BELL CRANK. It is held onto the ARM HEAD with a cam that looks like a screw. This cam is thicker on one side than it is on the other. Place a screw driver in the slot in the end of the cam and turn it as you watch the FOOT raise and then lower.

Turn the wheel by hand again until the NIPPLE raises to the highest point and the FOOT is at the lowest point.

Turn the cam until it is at the point where you can just barely move the paper under the FOOT without tearing the paper. When you have it positioned correctly, tighten the set screw.

This is the perfect setting for working on average material when using a backing material. You can put more pressure on the FOOT now, by screwing the PRESSER FOOT SLIDE BAR THUMB SCREW in more, less pressure by screwing

it out. If you are working on heavy jackets, chenille work or quilting, you may need to raise the FOOT a bit more.

H O W T O A D J U S T T H E N I P P L E

There are also TWO adjustments for the NIPPLE. They are just about the same as for the FOOT.

First, remove the NIPPLE CARRIER THUMB SCREW & NUT. They are located on the top of the ARM HEAD to the front.

Screw the NUT onto the SCREW so it is about one-half way on the threads. Replace it into the machine and screw it down to the NUT.

Place one piece of paper under the FOOT. Turn the wheel by hand until the NIPPLE is at the LOWEST point and the FOOT is at the highest.

See if you can pull the paper away slowly without tearing the paper. If the paper will not move, the NIPPLE is too low. If the paper moves too easily, the NIPPLE is too high.

On the back side of the ARM HEAD you will find another hole about one-half way down. (the lower hole) Use a small screw driver to loosen the set screw.

Turn the wheel by hand until the NIPPLE raises off the paper and the FOOT is still up also.

To the right of the set screw you will find the NIPPLE CARRIER BELL CRANK. It is also held in with the same type cam as the FOOT. Insert a larger screw driver into the slot in the end of the cam and turn it while watching the NIPPLE raise and lower.

Turn the wheel by hand again, until the NIPPLE is at the lowest point. Turn the cam and try to pull the paper. The NIPPLE is at the proper setting when the paper will just barely move without any drag. The NIPPLE should not really be holding the paper . . . just barely touching it.

When you have the NIPPLE at the right setting, tighten the set screw.

This should be the perfect setting for working on average materials with backing material. You can put more pressure on the NIPPLE by screwing in the NIPPLE CARRIER THUMB SCREW, less pressure by screwing it out.

When working on heavy materials, or doing chenille work or quilting, the NIPPLE will have to be raised.

Be very sure that you don't have the NIPPLE set too low because it can cut into the material you are working on if it is.

If you follow my instructions for setting the FOOT & NIPPLE adjustments and you can't get enough pressure on them without screwing the THUMB SCREWS way down, replace the PRESSER FOOT SPRING & the NIPPLE CARRIER SPRING . . . they are worn out!

If you have a problem getting the machine to make sharp turns, especially on block lettering, raise the FOOT & NIPPLE just a slight bit more. If you get these adjustments EXACTLY RIGHT . . .believe it or not, it will be easy to make square corners!

Over the years, one of the most difficult things I have had to contend with in teaching operators is convincing them that THEY MUST LEARN TO MAKE ADJUSTMENTS ON THE MACHINE THEMSELVES! I have seen girls I worked with fight with the machine for weeks trying to make square corners but . . . they would not pick up a screw driver and fix the problem! When I used to work in factories, this would drive me nuts! In some places I was the forelady, so I could go over and fix it for her . . . in others I was just another operator, but it still drove me nuts! so, I would come to work early and fix the machines without telling them I had done it. I would just smile when I would hear one operator telling another, "This machine just wouldn't work right at all before and now it is working just fine!" If I was there to fix your machine for you, I would, but since I'm not there you are going to have to do it!

Singer machines made before WW1 are about the same as the machines made after the war, but . . . even though they have the pressure adjustments for the FOOT & NIPPLE, they don't have the adjustment cams. The NIPPLE CARRIER BELL CRANK and the FEED BELL CRANK are attached to the ARM HEAD with actual screws. These old machines can be modernized very simply . . . replace the ARM HEAD and attach the parts with the adjustment cams and you will have a modernized machine. You can sometimes find the new style ARM HEADS at industrial sewing machine dealers and buy them used. Be sure the ARM HEAD has the holes on the sides for the set screws. If it does, it is the new style.

The really old pre-war machines have scissor loop springs instead of the coil springs. The only way to adjust the pressure on the foot & nipple is to try to find either a spring with more strength or one with less. You can try to bend the springs, but this must be done very carefully.

NOTE: When you adjust the pressure on the NIPPLE CARRIER, on the machines with the coil spring on the plunger, be sure to get the NUT tight on the THUMB SCREW! If you don't, it will work loose while you are sewing and the spring will send it flying to the ceiling. I doubt that there is an operator that has been operating the machine for any length of time that has not had this happen.

WHAT THE DIFFERENT

TYPES OF FEET ARE USED FOR

The FOOT with the RUBBER SHOE is used for most materials. The RUBBER SHOE protects the material and makes material that is smooth move easily.

The CLAW FOOT should be used when working on velvet or terry cloth or any other material that has a nap to it that the RUBBER SHOE would crush. If you are working on any material and you notice the FOOT marking the material, change to the other foot.

There is also a FOOT with a much smaller circle. They also have either the RUBBER SHOE or CLAWS.

The RUBBER SHOE should be replaced occasionally, you can use the THREAD KNIFE to stretch the RUBBER SHOE onto the FOOT.

SETTING-UP THE MACHINE

TO WORK WITH CONES OF THREAD

Your machine should be set-up so you can work with cones of thread as well as spools of thread.

For working with cones, your machine should be set-up so the cone can set on the floor to the left side of the operator. If you have a drawer in your table, put the thread on the floor either just to the right or to the left of the drawer. It should also set just under the front of the table.

Place a eyelet screw directly above the cone of thread. (see diagram below) into the underside of the table.

From there run the thread to the back of the table and place the second eyelet screw about one inch in from the back edge of the underside of the table.

From there run the thread over to the right and place the third eyelet screw about an inch in from the edge of the table but . . . be sure this one is placed in a straight line directly behind the tension assembly.

DIAGRAM FOR PLACING

EYELET SCREWS

UNDER THE MACHINE TABLE

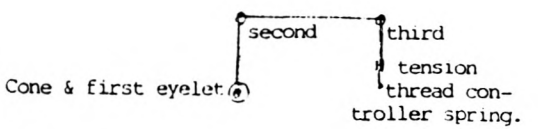

Run the thread through the eyelets then through the hole in the TENSION ASSEMBLY just below the TENSION DISK. Then over the top and down between the TENSION DISK. From there into the THREAD CONTROLLER SPRING. From there, thread the LOOPER with the threader wire as instructed before.

It is important that your cone of thread sit directly below the first eyelet screw so the thread can wind off the cone smoothly. If the thread binds anyplace along the line leading to the LOOPER, the machine will make tight stitches and fat stitches. This is even more important when working on chenille, you will have high and low pile to the chenille.

A D J U S T I N G T H E T H R E A D T E N S I O N

For more tension on the thread, turn the TENSION THUMB NUT toward you slowly. For less tension, turn the TENSION THUMB NUT away from you.

W O R K I N G W I T H S P O O L S

If you machine has the type of TENSION ASSEMBLY pictured in the SINGER PARTS LIST, you will notice a ROD pictured to the right of the diagram. In order to work with spools with this TENSION assembly, you must remove the TENSION STUD with the TENSION DISK on it and replace it with the SPOOL SCREW STUD.

The TENSION REGULATING PLATE will then rest against the spool of thread. The TENSION will then be adjusted by pushing the TENSION REGULATING LEVER (located to the right of the assembly) to the back for less tension and to the front for more tension.

If you want to work alternately with cones and spools and you don't want to be bothered with changing these parts all the time, leave the SPOOL SCREW STUD in place on the TENSION ASSEMBLY.

There is a bracket (not shown) available to place the TENSION STUD with the TENSION PLATES on it onto the underside of the table just behind the TENSION ASSEMBLY.

THE LOOPER

IT'S FUNCTION & PROPER TIMING

The function of the LOOPER is to wrap the thread around the needle and loop it onto the hook each time the needle comes down through the material into the LOOPER.

In order for the LOOPER to do this, it must be "TIMED" correctly. To check the timing of your LOOPER, raise the NEEDLE, remove the FOOT & NEEDLE PLATE. Turn the wheel by hand until the NIPPLE rises to the highest point. Turn the HANDLE so it & the NOSE are facing toward you.

For doing CHAIN STITCH WORK, the EYE of the LOOPER should be at 1:00 O'clock. (114 K 104 machines, the setting is 11:00 O'clock)

For doing CHENILLE EMBROIDERY, (also called moss or drop stitch) the EYE of the LOOPER should be at 6:00 O'clock. (this is the Chenille setting for ALL machines)

DIAGRAM FOR LOOPER

SETTINGS (TIMING)

CHAIN STITCH SETTING	CHAIN STITCH SETTING	CHENILLE STITCH SETTING
all machines except Singer 114 K 104	special Singer 114 K 104	(moss or drop) all machines
1:00 O'clock	11:00 O'clock	6:00 O'clock





THE LOOPER OPERATING GEAR

To switch the LOOPER setting from CHAIN STITCH to CHENILLE, (or visa-versa) post-war machines are equipped with a special LOOPER OPERATING GEAR.

It is located on the left end of the LOOPER OPERATING SHAFT under the machine.

This GEAR has a slot in the end that goes about one-half way around it with a notch at each end of the slot. In the end of the gear, there is a SPRING held in with a small COLLAR. The set screw in the COLLAR fits into the notch on either end of the slot in the GEAR.

To change the LOOPER setting to Chenille, simply pull the end of the LOOPER OPERATING GEAR to the left and turn it until the set screw drops into the notch at the other end of the slot in the LOOPER OPERATING GEAR. The notch in one end of the GEAR is for CHAIN STITCH and the other end is for CHENILLE. This makes it simple for operators to switch from one stitch to the other.

When changing the LOOPER OPERATING GEAR to the CHENILLE setting, you must also turn the NEEDLE BAR around so the opening in the HOOK of the NEEDLE is facing away from the NOSE instead of toward it.

M A N U A L L Y C H A N G I N G

T H E L O O P E R S E T T I N G

If you find that the LOOPER is not at the proper setting, it must be changed manually. Machines made before WW1 must be changed manually to switch to chenille.

You may find that the LOOPER setting is not in the right place for several reasons. Someone who didn't know how to properly time the LOOPER may have worked on the machine or, anytime you break a NEEDLE, the LOOPER can be thrown out of alignment.

To manually change the setting on any machine, just barely loosen the set screw on the LOOPER OPERATING GEAR. On the post war machines, be careful that you don't remove the screw . . .you will have one heck of a time getting it back into the collar. On the pre war machines, you wont have this problem, but the screw still just needs to be barely loosened.

After you have loosened the set screw, turn the HANDLE &

NOSE so they are aimed to the front toward you. Turn the wheel by hand until the NIPPLE raises to the highest point. Hold the HANDLE with your right hand and with your left hand, turn the LOOPER OPERATING GEAR until the LOOPER is at the correct setting.

Make sure the LOOPER OPERATING GEAR is flush on the end of the LOOPER OPERATING SHAFT then tighten the set screw.

R E M O V I N G T H E

L O O P E R G E A R A S S E M B L Y

When operating the BONNAZ machine, you may start having problems with the thread breaking or needles breaking for no apparent reason. You may also hear a slight grinding sound as you are working. The cause is usually broken needle hooks under the LOOPER POSITION PLATE. When this happens, you must remove the LOOPER GEAR ASSEMBLY and clean it out.

Now don't throw up your hands and run away! . . . let me ease your mind about playing mechanic on your BONNAZ machine.

When you remove a part there is only one way it will go back onto the machine. All of the nuts, bolts and screws are different and they will only fit into the place where they are supposed to go. If you always remember to NEVER FORCE ANYTHING, you wont have any problem. To make it easier, lay the parts out in the order they came off and replace them in reverse order.

To remove the LOOPER GEAR ASSEMBLY, turn the machine back on the hinges and let it rest on the REST PIN. Remove the two large screws holding the LOOPER BRACKET to the CASTING. If you have a problem removing these screws, use a larger screw driver or spray them with WD-40. It don't matter if you get them mixed up, they are both the same.

Loosen the set screw on the LOOPER OPERATING GEAR, don't remove the set screw completely, there is a spring inside

the gear on the post war machines and it is difficult to get the set screw back in place. Pull the LOOPER OPERATING GEAR to the left to remove it from the LOOPER OPERATING SHAFT.

Pull the LOOPER BRACKET away from the CASTING, being careful not to bend the LOOPER OPERATING SHAFT. On machines that have not had the LOOPER BRACKET removed for a long time, you may need to use a slight bit of force to remove it.

Remove the LOOPER POSITION PLATE SCREW and then the LOOPER POSITION PLATE. The LOOPER will fall out into your hand.

Clean all of the parts with WD-40 or lacquer thinner then put a coating of oil on them and put them back into the machine as they were.

Be sure to check the LOOPER for any signs of wear, if it is marked or it fits too loosely, or the eye is too rounded off instead of being sharply defined, replace it with a new LOOPER . . . they are quite inexpensive.

When you replace the LOOPER POSITION PLATE, be sure the manufacturers stamp & part number show on top of the PLATE. If you replace it upside down, it can cause problems. If you replace the LOOPER with a new one, replace the LOOPER OPERATING PLATE also.

When you replace the LOOPER OPERATING GEAR, be sure to get it flush on the end of the LOOPER OPERATING SHAFT. Time the LOOPER as instructed on page 71.

Now that you have seen that you can successfully play mechanic on your BONNAZ machine, (you saved more that the price of this book on the LOOPER alone) you can save yourself a lot of money and headaches, by learning to do other repairs & parts replacements yourself. Artistic Touch Book number five and Video Tape number five gives you complete instructions for doing other repairs on the BONNAZ machine. No embroidery shop should be without them. Mechanics who really know anything about the BONNAZ machine are few & far between. Most sewing machine

mechanics work on BONNAZ machines by GUESS WORK! Then when the operator tells them the machine still does not work right, they tell you, "IT is not the machine . . . it's the operator!" My answer to these self-taught experts is, "It's not the machine or the operator . . . it's the mechanic!" Doctors PRACTICE medicine and Lawyers PRACTICE law! isn't that enough? Do you really need a mechanic PRACTICING on your BONNAZ machine also? I personally prefer that someone KNOW what they are doing before I part with my hard earned money! Try telling any of your customers that you are PRACTICING embroidery on their garments!

There are a few mechanics that do know what they are doing and I have listed them in the companies that I recommend for services and supplies in this book. If you don't have the mechanical ability to learn to do your repairs yourself, at least send your machine to a mechanic that knows BONNAZ machines.

C H E N I L L E E M B R O I D E R Y

In the chapter on "TIMING THE LOOPER," you were given instructions for timing the LOOPER to do CHENILLE.

Chenille is a raised stitch caused by the machine pulling the thread through the material then dropping the stitch rather than chaining it into the next stitch to form a chain of stitches.

Chenille is used for lettering & designs on jackets, chenille school class letters & emblems, monograms on towels and what motorcycle clubs call "COLORS" plus many other applications.

When to use chenille depends a lot on the material it is to be used on. Chenille is not advised for light weight fabrics.

When doing chenille, it should always be outlined first with chain stitch. Sometimes, on more expensive jackets, the entire design should be done in chain stitch first then the chenille put over the chain stitch.

When you are doing chenille, there is no need to break off to go to the next letter. Simply raise the foot, drop the stitch (by turning the wheel backwards slightly as you move the material away from the needle) and move to the next letter. When you have completed the garment, cut the threads from the underside of the work, bring careful not to pull the threads because the chenille will rip out if you do.

When doing large filled in areas in chenille, it is filled in by "SCROLLING." I will teach you how to do this in the following chapter.

when doing towel monograms, it is best to use mercerized thread. Suisse "C" works best. For jackets and other things, you can use either 600 denier Rayon or Wool or Orlon yarn. I base my decision as to what thread to use on the material it is to go onto. For satin jackets, I use Rayon chenille. For heavy wool Letterman Jackets, I use wool or orlon.

Even though all embroidery thread is washable, the only chenille that I can safely say is washable is mercerized chenille on terry cloth towels. Since the stitch is not locked down, I just don't trust people not to put other things into a washer or dryer with a garment that has chenille embroidery on it. Buttons & zippers can hook onto the chenille and ravel it out. I always recommend that chenille be dry cleaned.

On almost all materials, you must use a backing material to do chenille or it can pulverize the material. Buckrum and crinoline are the best to use. See the chapter on "BACKING MATERIALS."

You should use the long point needles for doing rayon chenille (the same as you use for chain stitch) but, when doing wool or orlon chenille, it is best to use a CHENILLE HOOK. They look like a needle with the hook broken . . . but they are made this way purposely. When working on large chenille class letters, the machine is operated at FULL SPEED. Therefore the needle must release the thread as quickly as possible. Thus the design for the chenille hook.

I prefer to do a double outline with chain stitch before I put in the chenille so the chenille has a distinct outline around it. This keeps it from looking sloppy. Go through the entire job and do all of the outlining, then switch to chenille and do the fill-in.

Raise the needle and loosen the tension for a higher fluffier stitch and lower the needle and tighten the tension for a lower, tighter stitch.

The chenille BUD (that is what the stitch is called) should stand up straight and be lined up one right behind the other for a good stitch. They should not be turning to either side or laying down in any direction. They should also be all of the same height . . . no variations. If you are not getting this, be sure the needle is aligned properly and the tension is as loose as possible. Any drag on the thread between the cone and the looper will cause variations in the height.

When you do the fill-in (scrolling) for Rayon chenille you should be able to see each individual stitch standing independently. When doing Wool or Orlon chenille it should look like a bunch of little wiggling worms! Mercerized chenille should look like a plush bath towel.

H O W T O D O S C R O L L I N G

When filling in letters or large areas on chain stitch or chenille, first outline the letter or design. Then start putting circles one after the other inside the outline. This is called "SCROLLING." To keep the scrolling from separating from the outline when you are done, re-outline the letter or design just between the first outline and the scrolling.

In order to be able to produce lettering fast but yet maintain the quality, you must learn to do scrolling so it becomes automatic. If you have to think about the direction you are going in (after you have learned) you are doing it wrong! You should practice scrolling enough so the machine just seems to scroll in the direction you want to go by itself.

I have worked with operators who had to think about every turn of the handle in order to lay the scrolling in side by side. These operators worked twice as hard and accomplished only one-half as much as the operators who learned to let the machine do the work. Practice doing your scroll work with the machine going fairly fast . . . you will get to the point where the machine just seems to go where you are looking on the material.

Always turn the handle COUNTER CLOCKWISE when doing scrolling. the thread used on the BONNAZ machines is specially made for them. It is "RIGHT TWIST." If you turn the handle clockwise, you are working against the machine and un-twisting the thread. This can cause dropped stitches and fraying.

When working on multi-color designs,outline the complete design before doing the fill-in. If the design is done in chenille, you have to also outline each color in the design with chain stitch before doing the chenille fill-in. If you have several garments with the same design, do all of them with one color before going on to the next color.

Most designs look best with a separation outline, usually black separating the colors rather than just colors butted together.

F R E E H A N D W O R K

Many designs can be done free-hand. Names on the front of bowling shirts & jackets should be done free-hand. On the following pages, I have shown the upper & lower case free-hand script alphabet. This alphabet is designed so the letters connect together without your needing to break off. The upper case letters in particular are designed with this in mind. Take a good look at the capitol "P" for an example.

I have also shown some other free-hand designs that are used for borders and for you to practice doing.

Use your imagination when you are doing designs. If you are doing a picture of a horse, use the scrolling to show the muscle and curvature of his body. I have included a palm tree (done free-hand) to show you how to get a realistic effect to the palm fronds by using a larger stitch.

You will be surprised at how many designs can be done free-hand. When you do something over and over again, you get to where they all look so close to the same that you can do them free-hand, thus saving the time you would spend on stamping. This will increase your profits on some of these repetitive jobs where you can do this.

Many times you can do one-of-a-kind items free-hand, such as large script names on bath towels. Just be very careful to get the name centered, keep the letters the same height & size and LOOKING PROFESSIONAL! If you are doing monograms on towels where you have several that should be the same size and shape, don't try to do it free-hand, make a pattern and do a professional looking job.

Maybe I am too much of a "nit-picker" but I always feel that the customer has the right to expect quality workmanship when he brings something to anyone who professes to be a professional. If I am just writing a name on a jacket for one of the neighborhood kids or doing a $5,000.00 Country & Western outfit for a movie star, I feel they have the right to expect me to do the very best professional looking job that I can do.

When and if the day ever comes that I write a name on an eight year old kid's jacket and the kid's handwriting looks better than my embroidery work . . . that is the day I will hang-it-up and stroll off into the sunset!

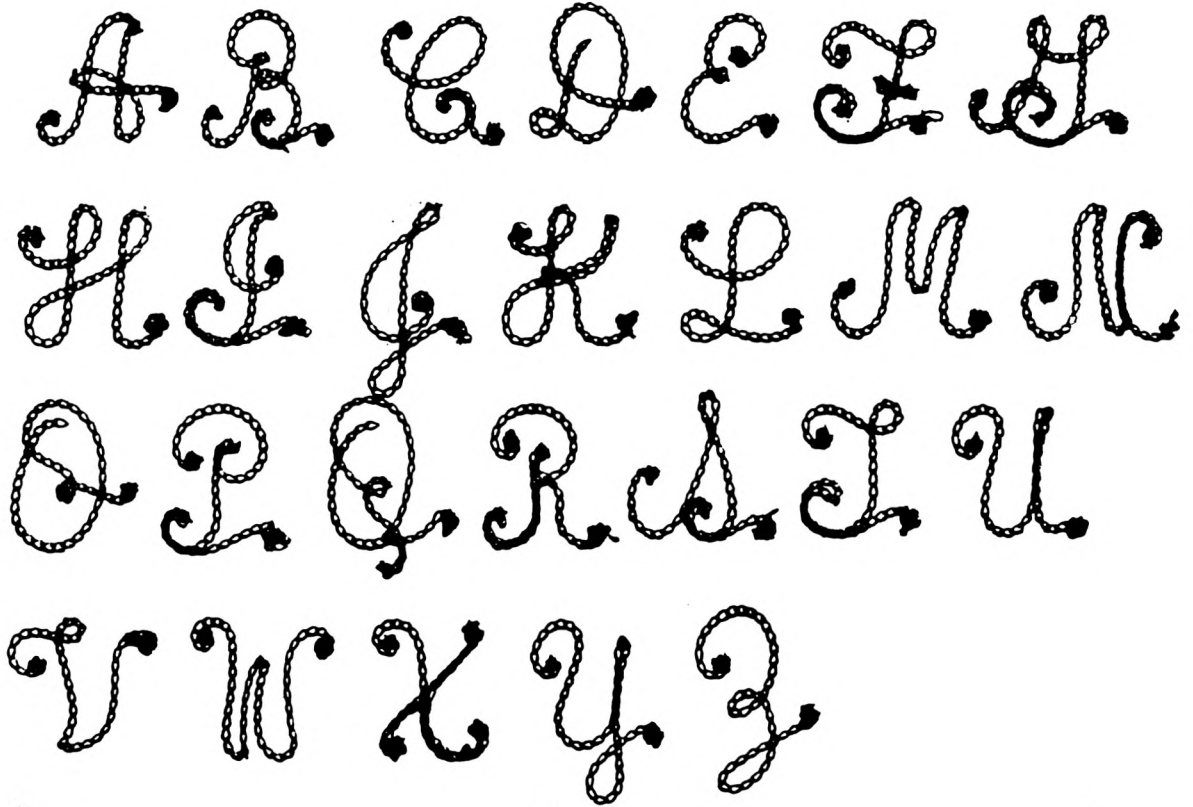


abcdefghijkl.
mnopqrstuv.
wxyz.

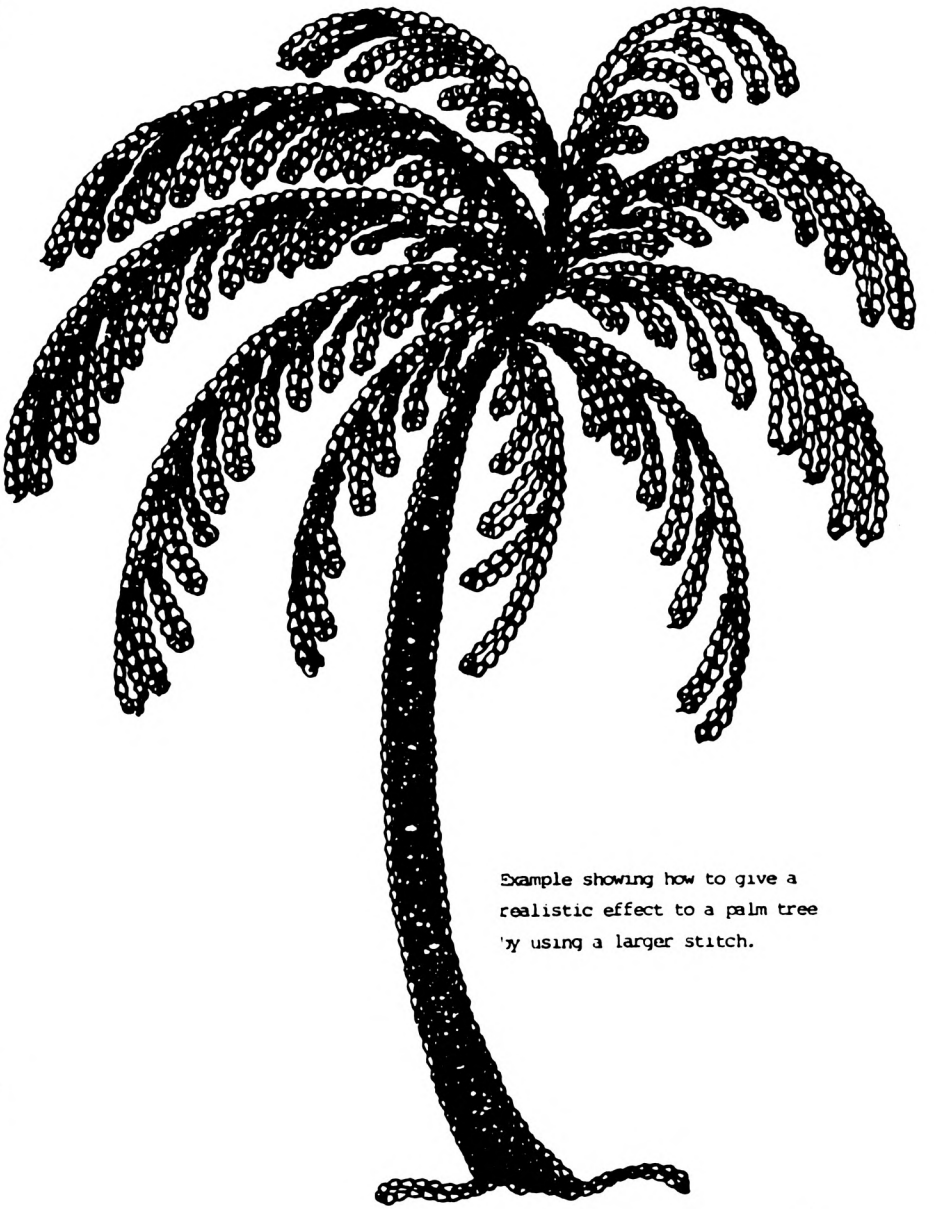

Example showing how to give a realistic effect to a palm tree by using a larger stitch.

BACKING MATERIALS

This chapter is likely to sound like an advertisement for Troy Thread Co. in Chicago. I have used them for my main supplier for many years. Of course there are other suppliers and some of them will be listed in the section of this book that tells you "WHERE TO GET IT!" I have always had a good relationship with Troy and I recommend them highly.

When working on the Bonnaz machines, almost every material must have some type of backing material. Any time I am working on a material that can be sewn without backing I do so. If you can save that expense, you should. I have seen operators put backing behind canvas . . . why? If you don't need it you are just wasting money and making extra work for yourself.

Backing is used for several reasons. The main one is to keep the material from moving around while you are doing the embroidery. For this application, I have used old phone directories, newspapers, paper towels and tissue paper . . . the best thing to use is TEARLON. It is a stiff, white non-woven material that tears away like paper when you are done.

TEARLON can also be used on one-of-a-kind designs where you do not need to save the pattern. Draw the design right on the TEARLON and put it on top of the material and embroider through it. When you are done, tear away all of the excess. (be sure to remove all of the little pieces.)

Other backings are used for the safety of the material you are sewing on. They serve to keep the material from stretching and they also give body to the material so you can sew it.

These backings are TROYLON, a non-woven heavier white fabric. CRINOLINE, a stiff, bleached white, starched open weave cotton, and BUCKRUM, a heavy woven un-bleached, open weave cotton used mostly for backing on chenille. SOFTLON, a lighter weight material like TROYLON. ORGANDY, a soft

woven nylon used for backing on sweaters. SOFT STITCH, a white woven-look material that is soft and open, used for backing on sweaters. I will give you other uses for all of these materials as I write about different things in the book.

How do you keep the garment straight while sewing? Either use straight pins to hold it to the backing material, or spray just the slightest amount of spray adhesive onto the backing material to hold the two pieces of material together.

For very fine materials that you can see through, you can't have backing material showing through the material, and you can't sew on this thin flimsy stuff without a backing so what do you do? . . . you make what is called "burn-off crinoline!"

H O W T O M A K E

B U R N - O F F C R I N O L I N E

Mix one tablespoon of sulphuric acid to one gallon of water. Let the solution stand overnight. Submerge several six to eight foot long pieces of crinoline (or whatever you need) in the solution for one hour. Remove the pieces and hang them to dry. (don't use a clothes dryer, it will all vanish!)

Prepared crinoline must be used within about 2 days or it will not burn away. After you have completed the embroidery, press over the crinoline on the back side with a warm to hot iron and the crinoline will darken to brown and disintegrate and fall away. To remove any traces of the crinoline, use a table spoon to scrape it away from the embroidery.

M O R E A B O U T B A C K I N G M A T E R I A L S

For other things, you will want to use CRINOLINE as is. When working on felt & other non-woven materials, you need backing to hold the material together. Designs with a lot of fill-in can be pulverized without a backing to hold it

together. When working on athletic felt and deco felt, use TROYLON, CRINOLINE or BUCKRUM, depending on how large the design and how much fill-in work is to be done.

Many times I want to use a backing material to keep the fabric from stretching AFTER I have done the embroidery. For this, I use TROYLON with HPO (hot press-on) After you have done the embroidery, cut away the excess leaving about 1/4" around the design. Press the TROYLON/HPO to the garment and it will not stretch.

H O W T O M A K E

P R E S S - O N A P P L I Q U E S

If you have ever looked at those little embroidered appliques and wondered how they were made without any material around them. DISINTEGRATING CLOTH is the answer. It is similar to burn-off crinoline except it is a bit heavier and it is available already made from TROY.

Embroider the design onto the material either with the chain stitch or satin stitch machine. Be sure the stitches are locked together as much as possible. single lines of embroidery will not work in this process.

When the embroidery is completed, press the material on the back and it will turn brown and fall away. Then press the design onto WELDING FILM (also sold by TROY) and break away the excess film around the design and you have a press-on applique ready to be pressed onto a garment.

H O W T O D O

L E T T E R I N G & A R T W O R K

F O R E M B R O I D E R Y

For most embroidery work you will need a pattern to follow. Your art work is the key to the whole thing . . . if you start with amateurish art work, you can't expect the embroidery work to look any better!

Many operators seem to think just because they have managed to learn to guide the BONNAZ machine, they have mastered it . . . wrong! The real mastery of your new skill has just begun!

You may think you can just draw any lettering and embroider it and that is good enough, just because it was embroidered and the machine is difficult to operate, the customer should be happy with whatever you produce.

From the looks of the inferior quality of workmanship that has been produced in the United States for the past twenty years or better, especially on the BONNAZ machines, I guess I am greatly out-numbered on my opinion about quality! But . . . I would like to point out to you that the BONNAZ embroidery industry has also came close to becoming a lost art in that same length of time. Hasn't it dawned on any of these people that produce this inferior quality work that their business has gone down hill because the customers just don't like the amateur look of the BONNAZ embroidery they produce?

For many years here in St, Louis, I have had customers come to my shop to have sets of towels monogrammed. I would suggest chain stitch monograms to them. Over & over I have had the customer tell me, "I don't want that chain stitch stuff . . . it looks so cheap & sloppy!" Then I show the customer my samples of chain stitch monograms and they can't believe they were done on the same type of machine as the sloppy amateurish chain stitch embroidery they had seen at some of the other shops here in town.

If a job is worth doing . . . it is worth doing right! As I said before, the key is in the art work. Don't make up your own lettering styles, use professionally designed lettering styles!

Books with all kinds of lettering styles are available at any art store. You may think the public can't tell the difference between hand drawn amateur lettering and styles professionally designed, but I assure you THEY DO KNOW THE DIFFERENCE! If you don't believe me, do two samples of script lettering, one you have just made up yourself and one copied from any lettering book. Show them to anyone walking down the street and the majority will pick the one from the lettering book.

The ARTISTIC TOUCH

LETTERING BOOK

Over the years I have made a collection of the fifty-one most popular styles of lettering. These are the ones your customers will be requesting. These include many block and script styles as well as old english and other fancy designs plus greek letters and other hard to find alphabets. I have put the entire collection into a book printed on 8½" X 11" paper and the book is in a three ring binder so you can remove the pages.

The full upper & lower case alphabet is shown for each style and the best part is they are shown in the two-inch size. That is the size used most often in chain stitch lettering.

If you can TRACE, you can make professional patterns in minutes from the lettering book.

Making enlargements & reductions used to be a big problem for the "EMBROIDERY ARTIST," now copy machines are available that have the capability to enlarge and reduce. If you are not able to get your own copy machine just yet, there are stores that make copies just about everywhere. Most of them have machines that will enlarge & reduce.

After you have been in the business for a while, you will find that a copy machine is just about as important to your business as your embroidery machines.

Another thing I have spent countless hours searching for, is pictures of different things that customers wanted me to embroider. When someone walks through your door and request a picture of a Cougar or a Cobra or any other special design, I hope you don't think you have to sit down and try to draw this for him. If you try to do that for every customer, you are going to loose your shirt on art work alone.

The ARTISTIC TOUCH LETTERING BOOK has several different pictures of just about every design you can think of in

the back of the book. There are sixty-two pages with fifteen designs on each page, that is nine hundred and thirty different designs. This includes national organization logos, birds, flowers and just about every thing you will ever have a call for. You will find this part of the book will save you many hours of work. Each design is shown clearly so you can enlarge or reduce it. The designs are about one & three-quarter inchs.

This book also gives you quite a bit of instruction on doing lay-outs & art work in general. It teaches you about balance and spacing and how to use different lettering styles to get a message across. Best of all you are shown how to do things the easy way just for the embroidery business.

The ARTISTIC TOUCH LETTERING BOOK also has a chart that tells you how long it takes on average to embroider each style shown in the book in every size from one inch to five inches. This is a valuable tool that you can use in figuring your prices. The book also has many tips to save you time and money!

The ARTISTIC TOUCH

MONOGRAM BOOK

The other art work problem I had in the early years, was finding lettering styles that could be adapted to monogramming. Since I have always done "CUSTOM MONOGRAMMING," my customers were not looking for the same monogram styles that were available in the department stores . . . they want something different, especially for the chain stitch monogrammed towel sets and linens.

I have made a collection of monogram styles, many of them I have designed, so they are not available any place else. I have put the entire collection of seventy-five styles into The ARTISTIC TOUCH MONOGRAM BOOK.

Each style includes the center letter and right and left side letters. The complete alphabet is shown for each style.

Each style is shown in the following sizes in the book. Two inch, one & one-half inch, one inch, three-quarter inch, one-half inch and one-quarter inch. You can make enlargements for other sizes.

In addition, all of the flowers and flourishes that I add to the monograms are also shown in all of the different sizes.

The MONOGRAM BOOK has information that tells you where monograms should be placed on different garments and on household items.

Included is a chart showing the price I charge for each style shown in the book. This chart shows my price for monograms from one-quarter inch up to fifteen inches for each style. You will have to adapt the prices to your area, but at least this will give you a good idea of what you should be charging.

HOW TO MAKE POUNCE PATTERNS FOR EMBROIDERY WORK

A pounce pattern is used by many other artist, sign painters etc. It is a piece of paper that the design is drawn onto, then small holes are punched in the paper following the design. The design is then transferred to the garment or fabric to be embroidered by using either stamping powder or stamping paste.

The pattern must be made using specially treated paper that will withstand the fluid used in the stamping paste without falling apart. This paper can be purchased from TROY and most of the other suppliers.

The pattern can be perforated in several ways. When I started in the business, we had specially made perforating machines that looked like a large grasshopper that did an excellent job, but . . . they take up a lot of room. Later on electric motor perforating machines were available. They looked like a small domestic sewing machine motor standing on end, it had a metal circle extending out from one side that you held between your thumb and finger to

guide the perforator around the design. The motor was attached to a metal circle that rested on the paper and the circle had three rods that held the motor above it. Coming out of the bottom of the motor was an oscillator type attachment that contained a needle. This made the needle raise up & down at high speed to perforate the paper. The speed could be adjusted by a rheostat. This was my favorite kind . . . the one I had for years finally died one day! It is completely beyond repair and I have not been able to find one to replace it. If any one knows where this type can be purchased, please let me know.

In the fifties, another electric perforator came on the market. It operated much the same way as the one I described, but it had a small head with the needle in it attached to a cable. They did a good job, but they were a little awkward to use. I can't find them either lately.

Many operators perforate patterns by filing one of the BONNAZ HOOKS (needles) down to a just a fine point instead of the hook, then they place the pattern on a piece of white scrim felt and perforate the pattern on the machine.

You can also perforate patterns by hand with a pin or needle, or with a needle stuck into the eraser end of a pencil.

All of the above mentioned ways work to make perforated patterns, but the one I really like the best will fit in your pocket! Small pounce wheels can be purchased at any art store. They are about the size of a ball-point pen. They have a wheel with small teeth in it that swivels as you follow the design. They come in several sizes but the best to use for embroidery patterns is the NUMBER NINE. It has a one-quarter inch wheel with 21 teeth. You simply follow the design and the wheel turns and punches the holes, it swivels to go around curves when you are doing script letters and designs and you can run it along the edge of a flat plastic ruler to get perfectly straight lines for block lettering. When you are done it fits nicely into your small tool box on your art table.

When perforating your pattern, I have found the best pad to use under the paper while you are punching the holes is a piece of white scrim felt. It makes it easy for you to see the design drawn on the paper and the paper kind of sticks to it so the paper is not moving around as you do the perforating.

When you have completed perforating the pattern, hold it up to a light and check to see that you have not missed anything. Then . . . turn the pattern over and use a piece of fine sand paper and sand off the back of the pattern. This will make the pattern lay flat to the material when you do the stamping and the stamping will not make blobs of stamping paste on the material.

When doing dress embroidery, especially single line designs, you should use stamping powder instead of paste. This is so if you miss following the stamping, it will just brush away. When making patterns to use with powder, perforate the pattern on the reverse side and don't sand off the holes. This will make the powder stamp more evenly onto the material.

H O W T O S T A M P T H E D E S I G N

Regular stamping paste is available in white, dark blue & light blue. There is also a special "MAGIC STAMPING PASTE & POWDER" that I will tell you about later. They are all available from TROY & the other suppliers.

To prepare the stamping paste for use, moisten the paste with mineral spirits (naphtha) available at any hardware store, or TRICHLOROETHANE. available from TROY. Rub the damp felt dauber across the paste until you have a creamy mixture.

Place the perforated pattern on the material or garment where you want the design, being careful to get it aligned correctly. Rub the dauber across the pattern where the holes are until the design has been transferred to the material below. BE SURE the pattern is not allowed to move while you are stamping. Remove the pattern and repeat the process on the next garment. Clean the pattern with

mineral spirits and put it away so you will have it in case your customer orders more of the same design. Be sure to clean both sides of the pattern with a soft cloth or paper towels.

When working with perforated patterns, always be sure to work on a smooth clean surface. If a piece of anything even as small as a grain of salt gets under the paper when you are sanding it . . . you will have an extra hole that will appear stamped on each thing you stamp. The same thing can happen if you run over anything with the dauber.

When stamping piece-goods, like emblems or shirt yolks or cuffs before the garment is put together, tape the top or side of the pattern to a table, then draw the outline of the item to be stamped on the table. Be sure you get the design in the right place. Lift the pattern, place the article in the outline, stamp it, then remove that one and replace it with the next one to be stamped.

Terry cloth is a difficult material to stamp because the loops move around and it is almost impossible to cover the stamping paste. You can stamp the design onto TEARLON or paper and place it on the towel and embroider through it. Tear away the remaining TEARLON or paper when you are done.

An easier way of working on terry cloth is by using MAGIC STAMPING PASTE. Also called "black-light" & "hidden glow." In order to use this, you must work in simi-darkness and use a black light fixture on your machine. This stamping paste glows green under the black light, but it can't be seen otherwise. This is the method I prefer, not only for terry cloth, but for just about anything where I am concerned about the stamping paste showing around the embroidery work after I am done.

When stamping garments, get into the habit of pinning the backing material to the garment as soon as you stamp it. Then it is ready to go to the machine. On lined jackets, be sure to pin through the outer material and the lining to the backing material. Get the lining pinned so it hangs right and is not bunched up or crooked.

After stamping paste has been used for a while, all of the paste will be gone in the center of the pan and it will be thick around the outer perimeter, Set the pan on a hot plate on low-heat. Let it melt down. Be sure to be very careful that it don't catch on fire. Let it cool and it will be as good as new.

If you decide to work with black light, get the fixture with the florescent tubes. Black light bulbs are available that fit into you regular light fixture, but . . . they don't work as well, plus if you touch them you can get a third degree burn.

T R I M M I N G & R E M O V I N G

T H E B A C K I N G M A T E R I A L

After you have completed the embroidery work, the backing material and excess threads must be removed, When trimming the back of the work, you can use nippers, scissors or you will find a seam ripper will do a terrific job. (see pictures of these items in the section on "work aides.")

Cut all of the threads away from the BACK of the embroidery then tear away the backing material (TEARLON) Now you just have the threads on the front of the material to worry about.

If you just cut these on chain stitch embroidery, your work will ravel out. The way to take care of this so the work will not ravel out is to pull the thread through to the back.

Pull the thread until the last stitch tightens and locks down over the break-off thread. Then use what I call a pull-through needle with a latch-hook on the end to pull the thread through to the back of the material. Put the pull-through needle in beside the last stitch, hook it onto the thread and pull it to the back.

Leave the thread at least one inch long. When the garment is cleaned or washed, the strands will separate and make a ball that will keep the work from ever raveling out. A special spray called "Thread-Lock" can be also be used to be SURE the work will not ravel.

In my shop, I always try to make everything as easy as possible. So . . . I invented my own pull-through needle. (also shown in the section on "Work Aides.) With the regular latch-hook needles, you push it through from the back of the material. With my special pull-through needle, you stick the pointed end into the material right next to the last stitch, latch onto the thread and pull it through. This saves quite a bit of time when you are doing a lot of pull-through's.

You can make these needles yourself. Melt the plastic from the end of the latch-hook needle. (Hold the needle with forceps and light the plastic and let it burn) Clean off any residue then file down the end to a fine point. These needles save you a lot of time, but . . . they are so small they are very easy to loose. You can waste all of the time you saved searching for them. Number one, threaten anyone in your shop that uses them with at least a week in the "Electric Chair," if they loose one . . . then keep a small magnet close by to keep the needle where you can find it.

H O W T O R E M O V E

C H A I N S T I T C H E M B R O I D E R Y

No book about chain stitch embroidery would be complete without a chapter on how to remove it.

When you make mistakes, you can save the garment by ripping out the work and doing it over. If this is done carefully it works quite well on most materials. Other materials like leather, ultra suede etc. will always have small holes, so the chain stitch embroidery can not be removed with out damage to the material. It is very difficult to remove chain stitch from terry cloth, but it can be done.

Locate the last stitch where it is locked down. The small magnifying glass called a "Thread counter," shown in the section on "Work Aides," will be a great help in finding that last stitch. Pick the stitch loose with a pin or needle then get hold of the thread from the back of the work and pull . . . the chain will rip out completely.

When removing chain stitch, from time to time, the thread will break and you will have to find the end again. This is where the magnifying glass really comes in as a help. Don't get frustrated if you can't locate the end right away. Keep searching! If you try to start it again by cutting the thread in another place, you will most likely end up with holes in the fabric.

If your chain stitch don't rip out easily, if the thread keeps breaking and the material seems to be pulverized, you have a problem with your machine. This can be caused by a bent needle, a machine that needs to be cleaned (looper, nipple & needle shaft) too small of a needle or plate hole and many other causes. Don't fail to do something about it if you discover that the work wont rip out easily, especially if the thread is being frayed. Your customer is purchasing chain stitch embroidery . . . not cut-chenille! That is what they will have when they wash garments done on a machine that is cutting, breaking or fraying the thread.

W O R K A I D E S

The items shown in this section will make your work much easier. All of them are available from TROY and the other suppliers.



Thread Lock.
Spray on pull-thru threads to keep from raveling out.

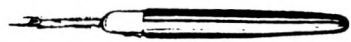

Seam ripper
For ripping out seams & can also be used for trimming back of work instead of thread nippers.



"Artistic Touch" pull-through needle



Thread Nippers
¼ actual size



Pull-Through Needle Latch-hook
½ actual size

MISCELLANEOUS ITEMS

On this page, the items shown will make your work easier, all of them are available from the suppliers.



Spray adhesive. Spray backing material lightly to hold to garment & other uses.

Foot Knife
Used to replace rubber washer onto the foot. Also to pick up chain when breaking off & other uses.

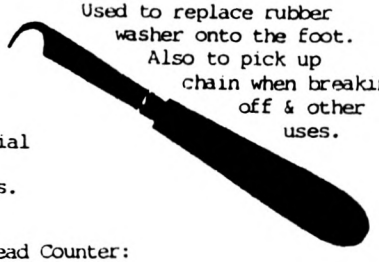



Thread Counter: Magnifys so you can find that last thread when you remove embroidery work. Also to see damaged needles.

WD-40



For cleaning & oiling the machine.



TAilors Crayon. Available in black, white & colors. To copy an embroidered design, lay a piece of pattern paper over the old design and rub with Tailors crayon. Design will be visable on patter paper.

HEAVY DUTY CLOTH CLAMP

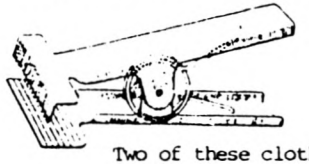

Two of these cloth clamps will work great to hold your pattern while you are stamping.

LONG FLAT NOSE PLIER





Belt pliers are a necessity if your machine has a leather belt. They cut the belt, punch the hole & lock in the belt hooks. It is really better to try to get V-belts for your machines.

DRESS EMBROIDERY

In the dress embroidery field, you can do whatever you like . . . there are no rules. Dress embroidery is making a come back right now all over Europe and the United States. More and more you see examples of BONNAZ EMBROIDERY worn by the "Beautiful People!" Princess Di, The Duchess of York and many others.

Try combinations of embroidery work done on an assortment of the machines. Appliques outlined with chain stitch, Chain stitch and chenille with satin stitch, feather stitch with cording and many other imaginative ideas.

Information about how to operate the other BONNAZ MACHINES can be found in ARTISTIC TOUCH BOOK NUMBER FOUR . . . "CORDING, BRAID & SPECIAL MACHINES."

When doing single line designs, used very much in dress embroidery, you will have problems covering the design stamped on the fabric. Use stamping powder or the magic stamping paste. When using stamping powder, perforate your pattern on the reverse side and do not sand off the holes. The raised holes will pick up the powder from the dauber much better and the stamping will be clear to see. Magic stamping powder is also available so you can work with the black-light and there will be no trace of the stamping, especially when working on very thin materials like silk & organdy.

DRESS EMBROIDERY SAMPLES

Generally, when doing dress embroidery, you will be working with the manufacturers designer. The designer draws the design and brings it to you to make samples. BE SURE TO CHARGE FOR YOUR SAMPLES . . . you may not get the job! If it becomes known that you will make FREE SAMPLES, you will be making a lot of them! The dress houses will have you make the sample then they will use it to seek bids from other embroiderers. The low bidder will get the job, generally without any consideration for quality.

If you find yourself making many samples and not getting the job, let the other guy make the samples and you bid on the job from his sample.

If it is known by the dress houses that your shop is creative, that you offer a variety of stitch styles, you do quality work and you complete jobs on time . . . you will get the jobs even if you are not the low bidder. When you become "The leader of the pack!" you can go back to making samples! they will pay you for them and they will very seldom seek other bids.

Once your samples have been approved, the dress house will have you make pre-production samples. I charge about four times the production price for the original sample, then double the production price for the pre-production samples. There will be a small quantity of these done in each size and color the dress house plans to put in the line. When you make the pre-production samples, YOU MUST keep accurate time studies so you can figure the ACTUAL PRODUCTION PRICE. All of the prices quoted up to now are estimates. At this point, the price may go up or it may go down.

If you find you can not do the job for the price originally quoted, and the dress house will not go along with an increase, get out now before you loose your shirt!

In order to be fair, your clients must also know that the price could go down! You may find that you can do the job for a much lower price and still make money. This could cause a dilemma to many people. Should you go ahead and do the job and make the excessive profit? Perhaps! but for me, things have to work both ways in order for me to face myself in the mirror and sleep at night.

I have also found out when I am fair with clients, I get the work even when some other shop under bids me. They know I will not sacrifice quality to rush a job through and I will not cut corners to save myself on a job where I have under bid. This is called "BUILDING A REPUTATION!" Many un-scrupulous people don't worry about things like this, but . . . I have to live with me!

PRODUCTION

The dress manufacturer will send you the pieces to be embroidered before the garment is sewn together. They usually order by the hundreds or thousands. Be very careful not to mix up the bundles (sizes) when you do the order.

You will also have to give them a production schedule, where they will pick up portions of the job as it is in work and a completion date. This promise must be kept even if you have to work twenty-four hour shift to do it.

When doing production work on large orders, the way the work is handled is extremely important. You must figure out how to get the job done with the least amount of handling. The work should flow from one operation to the other without problems. The people working for you are the best experts around to consult on getting the work done faster. Ask for their input and give a lot of consideration to their suggestions.

FIGURING YOUR PRICES

Be careful when you figure you prices because once you set the final price you are stuck with it. If you don't figure all of the hidden cost into the job, you will end up working for nothing.

Such things as sewing a quantity of emblems onto jackets sounds like a simple thing to do, but you must check to see how the jackets will be brought to you. If the manufacturer brings you just the jacket fronts before they are sewn together, you can do the job at a very low price and make money. If the jackets are sent to you ready-made and in plastic bags, taped shut. You can spend days just taking the jackets out of the bags and putting them back in. Your price for sewing emblems onto ready-made jackets should be about four times the price for pre-sewn fronts.

If more people in the embroidery business will give more consideration to charging fair prices instead of low prices to cut their competitor, everyone will be better off and the trade will improve. There is enough work for all of us.

EMBROIDERING JACKETS

When working on satin jackets on the chain stitch machine, be sure to turn the wheel so the needle is up into the nipple before you put the jacket under the needle. If you don't do this, you can make a scratch across the satin and ruin the jacket. To protect the sleeves while you are sewing, pull them up inside themselves to keep them out of the way while you work. Don't let the sleeves or any other part of a garment rub against the belt of the machine while you are working.

When working on lined jackets, pin the backing material to the shell and lining being careful to avoid getting the lining crooked or bunched up. Check to see that the jacket hangs straight before you start the embroidery.

On heavy wool jackets and even some satin jackets with quilted linings, especially when you are doing chenille, it is best to open the jacket at the waist-band and just put the embroidery on the outer shell. When doing chenille on wool jackets, use BUCKRUM for the backing. When the work is completed trim away the excess BUCKRUM and re-close the waist-band.

A MATERIAL TO WATCH OUT FOR

There is a material used by some jacket manufacturers that can be embroidered on the satin stitch machines but it CAN NOT BE EMBROIDERED ON THE CHAIN STITCH MACHINE! The material is called "JEWEL SATIN." No matter what you do or what kind of backing you use, the machine will pull the threads in the material all around the design and ruin the jacket. The manufacturers say it is not the material, there is something wrong with our machines . . . since I don't know of anyone that has a chain stitch embroidery machine that will work on this material, I say it is the material! I have had numerous complaints about this material from many people. There is no way of telling that this is what you have before you try to work on it. Then the jacket is already ruined.

Don't get suckered into paying for damage to these jackets. Send them back to the manufacture and demand a refund. The manufacturers are aware of this problem! They should stop making jackets out of this material or they should carry a warning to chain stitch embroidery operators, prominently displayed on the front of the jacket so it will be seen . . . not inside under the size label. This material IS NOT the "Jewel cotton back Satin" carried by TROY THREAD CO. The chain stitch machine works fine on TROY'S Jewel cotton back Satin.

EMBROIDERING BOWLING SHIRTS

Bowling shirts used to be a lot more popular than they are now. Back in the fifties, bowling season was almost all year around. Bowling is more popular than ever, but teams have a hard time finding sponsors that will pay the additional cost for embroidered bowling shirts. I hate to say this, but advertising on bowling shirts is not the best form of advertising available. Even for people that sell bowling shirts, there are forms of advertising that will bring in better results. (Boy, will I ever hear about this!)

However, if the team does get a sponsor, he is "Penny-wise and pound-foolish," when he decides on screen-printed shirts over embroidered ones.

With washing and wear, screen printed shirts start to fade before the end of the season and they need to be replaced every year. Embroidered shirts will last about three years so . . . are they really more expensive? (I'll hear about this too!)

When you embroider bowling shirts, it is necessary to make the pattern so it will not be too small for the large shirts and too large for the small shirts. You don't want to make a different pattern for each size, so it is best to compromise. If you make the pattern no wider than fourteen inches and no higher than twelve inches, you should not have any problems. This was one of the original "One size fits all" deals. Making more than one pattern for a team with five players is dumb!

When you stamp the design on the back of bowling shirts, put the top of the lettering no higher than one inch below the yoke. If the shirt does not have a yoke, put the top of the lettering five inches down from the collar at the center of the shirt.

The bowlers first name should go above the left front pocket. By left front, I mean if you were wearing the shirt. If the shirt don't have a pocket . . . the name still goes in the same place.

The bowlers last name should be placed on the yoke of the left shoulder. If the shirt don't have a yoke, mark a line with white tailors crayon, or put a line of scotch tape. Embroider the name above it then remove the tape.

I have seen names on the collars of bowling shirts and down at the waist line and on the sleeve, this is acceptable, but if the team is bowling in a league, be sure this is acceptable by the league before YOU suggest it. The purpose behind names on bowling shirts is for the score keeper to see the name when keeping the bowlers score.

Write the name so it can be read from a distance but don't make them too large. About three-quarters of an inch for the capitol letter and one-half inch for the lower case.

BE SURE TO SPELL THE NAME CORRECTLY!

Here's a little lesson in human nature . . . if you mis-spell a persons name, by the time he brings the shirt back to you to have it changed, he will complain that the lettering is crooked, the spacing is wrong, the material is no good, and he will even complain that the oysters made the mother-of-pearl wrong for the buttons. People are very particular about their name and they seem to take your mis-spelling it as a personal insult!

I have never understood why people do this, but you will find out they do! Take a little extra time and make sure you copy the spelling exactly as it is written on the order. Avoid the problem in the first place.

OUT-LINING LETTERS

When you do a different color out-line on lettering, DO THE OUT-LINE FIRST! By doing this, you can sew down into the body of the letter where you will fill in with the second color later on. Just drop the stitch instead of breaking off, and move over to the next letter. this will save you from trimming threads before you put in the second color.

When you put in the second color, the stitch will be locked down under the second color so the out-line can not ravel.

When I do out-lining, I always put a double out-line one on top of the other. When you put the second color in, it must also be outlined before you do the scrolling. When doing large letters, put a double out-line side by side then another line down through the center of them.

TRICKS & SPECIAL TOUCHES

Use your imagination . . . when you make round things, start at the center and spiral out to the perimeter. For a horses face, do the long part in straight lines then scroll when you do the cheek. Learn to do these little extra things that set you apart from others. Your customers will notice, plus YOU will have that extra measure of pride in your work.

A trick I use when doing bowling shirts or jackets. I don't like the sleeves and tail of the garment hanging in my lap as I work, so . . . I turn the garment upside down! Right, you are working upside down and backwards, but this has other advantages also! You will be able to set on one side of a desk and read what someone is writing on the other side! Don't try this until you are more experienced on the machine.

When you do lettering, you will always have a slight separation between the out-line and the scrolling. No matter how hard you try, this can't be avoided. To solve the problem, put a final out-line just between the outline and the scrolling .

To keep from loosing your pull-through needle, place a small magnet on the ARM HEAD of your machine to hold it.

When you set up your shop, rather than put your thread on shelves, make thread racks by using 1" X 2" pieces of lumber. Drill holes on a slanted angle every four inches and insert a dowel pin about 8" long. Nail the rack to the wall beside your machine. You can place several of these strips 6" apart and store twice as much thread in the same space as a shelve. The thread is easy to get at and you can see all of the colors.

I've worked in shops that have had all kinds of intricate set-ups for stamping shirts and jackets. I have never found anything that works better than an ironing board. Place a piece of masonite on the large end and tape it to the ironing board. Lay the backing material on the board, then place the garment over it. Do the stamping, pin the backing to the garment, slip a hanger into the neck and pull the garment off the board and place it on the rack.

When removing TEARLON from the back of anything, pull the material first on the bias going in both directions. The TEARLON will almost all break away for easy removal.

When doing long straight lines or large circles, let your right hand shake slightly as you follow the design . . . you will be surprised at how much easier it is to get the line straight.

To find the center when you are stamping shirts, towels or anything else, fold it and place a straight pin at the fold.

When filling in large areas with scroll work, start at the center and work your way out. The material will be less apt to pucker. this is especially important when doing chenille. Be sure to overlap the scrolling so it will not leave spaces.

There are many other tricks that I just can't think of right now, if you have a problem doing something, give me a call . . . I've probably had the same problem in the past. I may have a solution for you.

TEE-SHIRTS, SWEATS AND DOUBLE KNITS

Any time you work on knit material with the chain stitch machine, the needle can pick up the threads from the garment and break them as you are sewing. When this happens, the knit material will run like a nylon stocking.

In addition, knit material stretches. So . . . due to these problems, extra care must be taken when working on any knit material.

If you will use BONNAZ HOOKS (needles) that are smaller than the thread in the fabric, this will make it harder for the needle to hook the material. This will mean you will also have to use thinner thread.

This problem can also be avoided to a certain extent by using short point needles. Be sure to choose needles from the package that have a hook that is closed more. This will also help.

Every time I discuss this particular problem with sewing machine operators, they say "Use ball point needles!" that would be fine, and it does work on regular sewing. Ball points keep the needle from splitting the knit threads as you sew. But that is not the problem on the chain stitch machine! When doing chain stitch, the hook goes through the material all right, but when it brings the thread back to the top the hook can pick up thread from the garment and break it.

There is really no way to avoid this problem other than doing all knit materials on the satin stitch machine. (that is the way I avoid it in my shop) From time to time, you have customers that insist! So the following suggestions will help.

By using ORGANDY as your backing cloth, due to its close weave, the breakage doesn't occur as much. But just using ORGANDY on a knit will not give the garment stability so you can embroider on it, so . . . add a piece of TEARLON behind it. The TEARLON has to be torn a way when you are done and the ORGANDY will need to be cut away.

Sweatshirt material, even though it is a knit material, doesn't seem to give the same problems. I think some of this is due to the fleece on the back of the material.

You will get the best results when working on sweats by using the ORGANDY, TEARLON combination.

For some un-known reason (at least un-known to me) you don't seem to have the problem as much with double knits. I still prefer to use the ORGANDY, TEARLON combination on these also.

The cheaper the quality of the material, the more problems you will have. Tee-shirts will give you the biggest problem and expensive double knits the least.

You can embroider on any material (except the Jewel Satin I told you about before) so long as you figure out how you are going to do it before you start. Just be sure to use common sense and the proper backing.

Ultra suede can be embroidered with the chain stitch machine without the foot making marks by using the smallest claw foot and using TEARLON under the material and on top of the material. Tear the TEARLON away when you are done and there will be no marks. Be sure to work with a light pressure on the foot. If you try this same process on tee-shirts . . . you will have holes all around the embroidery.

You can save yourself a lot of headaches by going to a yard goods store and picking up remnants of many different types of material, then do swatch samples using different backings until you find the ones that work best. By knowing what will happen before you start working on a customers garment you can save yourself a lot of problems and possibly even keep from having to pay for a damaged jacket.

Sometimes, you can save the day with ingenuity! A lady working for me sewed an emblem onto the leather sleeve of a jacket. She realized she had put the emblem on the wrong sleeve. When she tried to remove it, she damaged the jacket. I was about to call and order another jacket, when

I thought I would try something else first. I called the customer and told her what had happened. Then I asked her if her son would like his graduation year on the other sleeve of his jacket. She said he had wanted it but, she had told him she couldn't afford it right then. I told her we would put it on for her at no charge.

The customer was happy, her son was delighted and I didn't have to replace a $90.00 jacket. The lady who had created the problem decided not to jump off the balcony after all and everyone was happy!

Things like this happen in this business, if you don't get all upset and fly off the handle a solution can be found that will save the day.

A lot of times problems are caused by thinking things have to be done a certain way! They really don't . . . necessity is the mother of invention, if something don't work by using the methods that generally work try something new, it may work.

One time I had to do embroidery on heavy leather for seat covers . . . if I used the claw foot, it would mark the leather. If I used the rubber shoe, the leather would not move. How did I solve the problem? . . . WAX PAPER! By putting a piece of wax paper above and below the leather, the machine would move and the foot didn't make marks.

M O N O G R A M M I N G

When most people think MONOGRAM, they think in terms of monograms on sweaters and shirt pockets. These are just two of the many uses for monograms. Monograms are used on many other items of clothing as well as many household items.

As a general rule, sweater monograms are done on the satin stitch machine. Once in a while you will have a customer that likes the look of chain stitch and she will have a chain stitch monogram put on a sweater, but not very often. Since you are learning to do chain stitch embroidery, you may think since you like the chain stitch so much yourself . . . you will try to change the publics mind and sell them on chain stitch sweater monograms anyway! PLEASE! . . . in this case, let well enough alone!

Trying to do chain stitch monograms on sweaters can become a real headache! The knit wants to stretch as you work. The letters spread out wider than you wanted them when you do the scrolling, and all kinds of other things happen that can turn a simple three letter monogram into several hours of trying to keep from replacing someone's sweater.

If you insist on doing it anyhow, draw the pattern much thinner so it can spread and still look right. For backing use ORGANDY, but spray it with "Spray adhesive" so the knit can not move. Then place a piece of TEARLON under the organdy and another piece on the front. Draw the design on the top piece of TEARLON.

This is the only time that you don't put the final outline. Instead, double outline it, one just inside the other. Then put a third line down through the center of the first two. Then do the scrolling. This will help to keep it from spreading. Using wool thread adds a bit of elegance to these monograms. You will find that they do look beautiful if done right, but it is much easier to do sweater monograms on the satin stitch machine.

You may get the idea to try chenille sweater monograms also. Be sure to keep the lines even thinner and do the COMPLETE monogram in chain stitch before adding the chenille. These really look great, but they are a lot of work. Be sure you charge more for them.

No matter how beautiful your chain stitch sweater monograms are, the public still will choose satin stitch monograms most of the time. Just the opposite is true when it comes to towel monograms. The chain stitch is much more beautiful on terry cloth. It is softer and it is also much faster than satin stitch. I have never had a customer that didn't prefer chain stitch for towel monograms.

I also believe the chain stitch monograms out last satin stitch on towels. I've had customers bring back samples of towels I monogrammed twenty-five years ago to have a new set made. The embroidery was still perfect, but the towel around it was all but gone!

I would like to pass this suggestion on to you . . . when one of your customers is looking for a gift for a child, suggest a bath towel with the child's name embroidered on it. I have been told by the kids who received them that it was the one gift they really remember. It made them feel special! I have had them come back years later to purchase the "SPECIAL" towels for their own kids. I have never ran across any gift that makes more of a lasting impression.

T O W E L M O N O G R A M S I Z E S

The monogram size generally used for wash cloths is 1½" to 2½". Finger tip towels, 2½" to 3". Hand towels, 3" to 4". Bath towels, 4" to 5". Bath mats, 6" to 8". Bath sheets, 8" to 10". If you also do shower curtains, the monogram should be 10" to 12".

T O W E L M O N O G R A M P L A C E M E N T

On all towel sizes, the monogram should be centered.

BATH TOWELS with border line . . . 1" above border line
BATH TOWELS without border line. . 5" up from hem.
HAND TOWELS with border line . . . 3/4" above border.
HAND TOWELS without border line. . 4" up from hem.
FINGER TIPS with border line . . . 1/2" above border.
FINGER TIPS without border line. . 2½" up from hem.
WASH CLOTHS with border line . . . 1/2" above border.
WASH CLOTHS without border line. . 2" up from hem.

EXCEPTIONS: When the wash cloth does not have a border line, the monogram can be placed in one corner.

There is no set place for a monogram on bath sheets or shower curtains. It is strictly up to the customer. Be sure you ask then where they want the monogram placed.

On bath mats, the monogram should go in the exact center of the mat when looking at the mat lengthwise. Sometimes the customer will request that the monogram go on one end. In this case, it should be placed about 5" up from the bottom.

THE EASY WAY TO DO BATH MATS

If you do bath mats very often, you will find they are easier to do if the nipple is raised higher. SO . . . every time you do a bath mat, are you going to change all of the adjustments on your machine for just one bath mat? Hardly! You will find it will be a lot easier to just change the nipple! I have one number 7 nipple that I use just for bath mats and heavy, thick things. It is filed off about 1/16 of an inch shorter than the other nipples.

WHICH INITIAL GOES WHERE ?

When there is a larger letter in a monogram, no matter where it is, in the center, on the end, left or right, it is ALWAYS THE INITIAL FOR THE SURNAME!

If the large letter is in the center, the initial to the left is the woman's given (first) name and the initial to the right is (a) her maiden name on household items, (b) her middle name on personal items.

If the large letter is to the left or right or even if it is above or below the two smaller letters, the small letters will always go in the same order as stated above.

Of course these are old rules that applied back in the days of Emily post. Now, it really don't matter . . . I tell the customer what Emily had to say about it, then I do what the customer wants me to do.

It is not unusual to monogram half of a set of towels with the woman's initials and the other half with the man's. This would be un-heard of in the old days!

Another of Emily Post rules that has gone by the wayside, is that the household items should ALWAYS be the wife's initials. In this day and age, many couples are not married and many women do not take the husbands surname even when they are married. You will find it will be best if you handle this subject like a hot potato! Don't start spouting off about rules of etiquette unless you are asked.

I have also learned not to ask questions. When people have unusual request, unless it is crude or obscene, it is none of my business. I have embroidered things on items over the years that to this day I wonder just what that was all about!

S H A D E D M O N O G R A M S

To add some real "FINESSE" to a monogram add shading. This is a line of chain stitch of a different color, placed just to the right of the letter. (see sample on page 113) Don't forget to charge extra for this.

B A C K I N G F O R T E R R Y C L O T H

You will find TEARLON works best for backing on terry cloth. If it is only one name or one monogram, draw the design on the TEARLON and put it on the top of the material and embroider through it. Remove the excess when you are done.

S T A M P I N G T E R R Y C L O T H

When you have several to do, make a pounce pattern and stamp the design on the towels with magic stamping paste and use the black-light. Don't ever try to stamp terry cloth with the regular stamping paste. You will find it is impossible to cover all of the stamping because the loops on the terry cloth move as you are doing the embroidery.

OTHER TIPS FOR

WORKING ON TERRY CLOTH

When doing sets of towels, go through the complete set with one color before you change thread to do the next color.

It is easier to work on terry cloth when using the claw foot on the machine.

The thread that works best is Suisse "C" mercerized, or Robinson-Anton 20/2 right twist mercerized thread. Both are available from TROY. Rayon may look pritty to you when you have just done a towel monogram with it, but each time it is washed, on terry cloth it seems to shrink a little more until it ends up looking terrible. This happens because hotter water, stronger detergents & bleach, and hot dryers for longer periods of time are used on towels. Better care is given to bowling shirts and other garments so you don't have this problem with the rayon thread on them.

SOME SPECIAL MONOGRAM TIPS

Another lesson in human nature! In all other animals, the male of the species is the most colorful, except the human animal! There are not very many places where the human male can act like a peacock and strut his stuff and show his full colors. You may be surprised at the response if you suggest to a bowling team that they have each guys monogram placed on the sleeve of their shirts. Another thing men seem to delight in is a large monogram on boxer shorts. He is the only one that knows it is there, but he still feels more colorful knowing it is there!

Small rayon chenille monograms on wool or cashmere scarves are also a luxury item that men like. Use your imagination, you will come up with many other subtle ways for the male of the human species to show his colors!

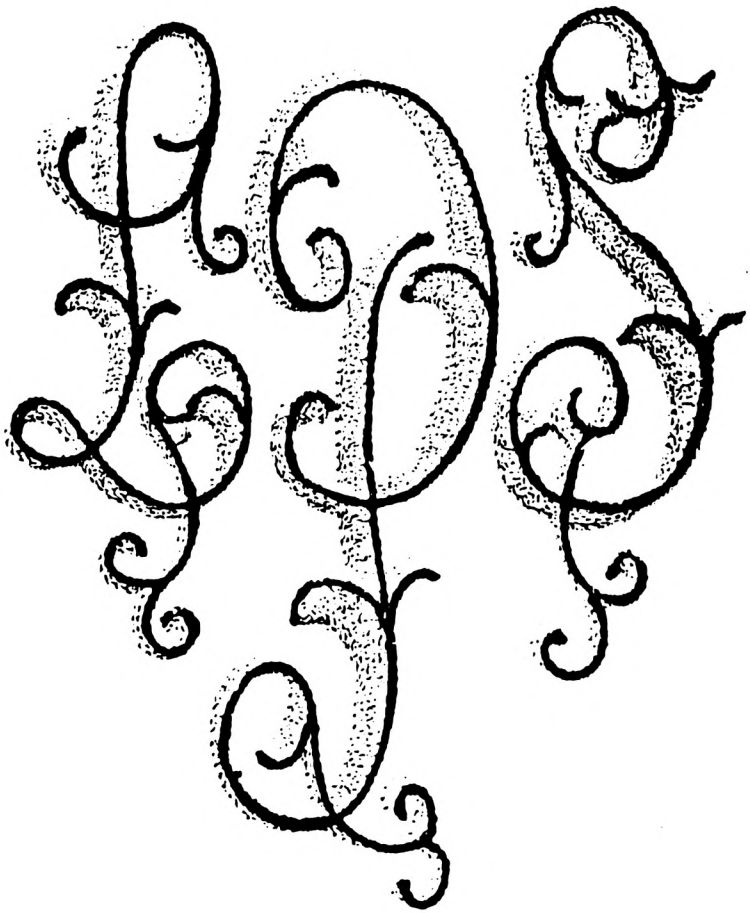

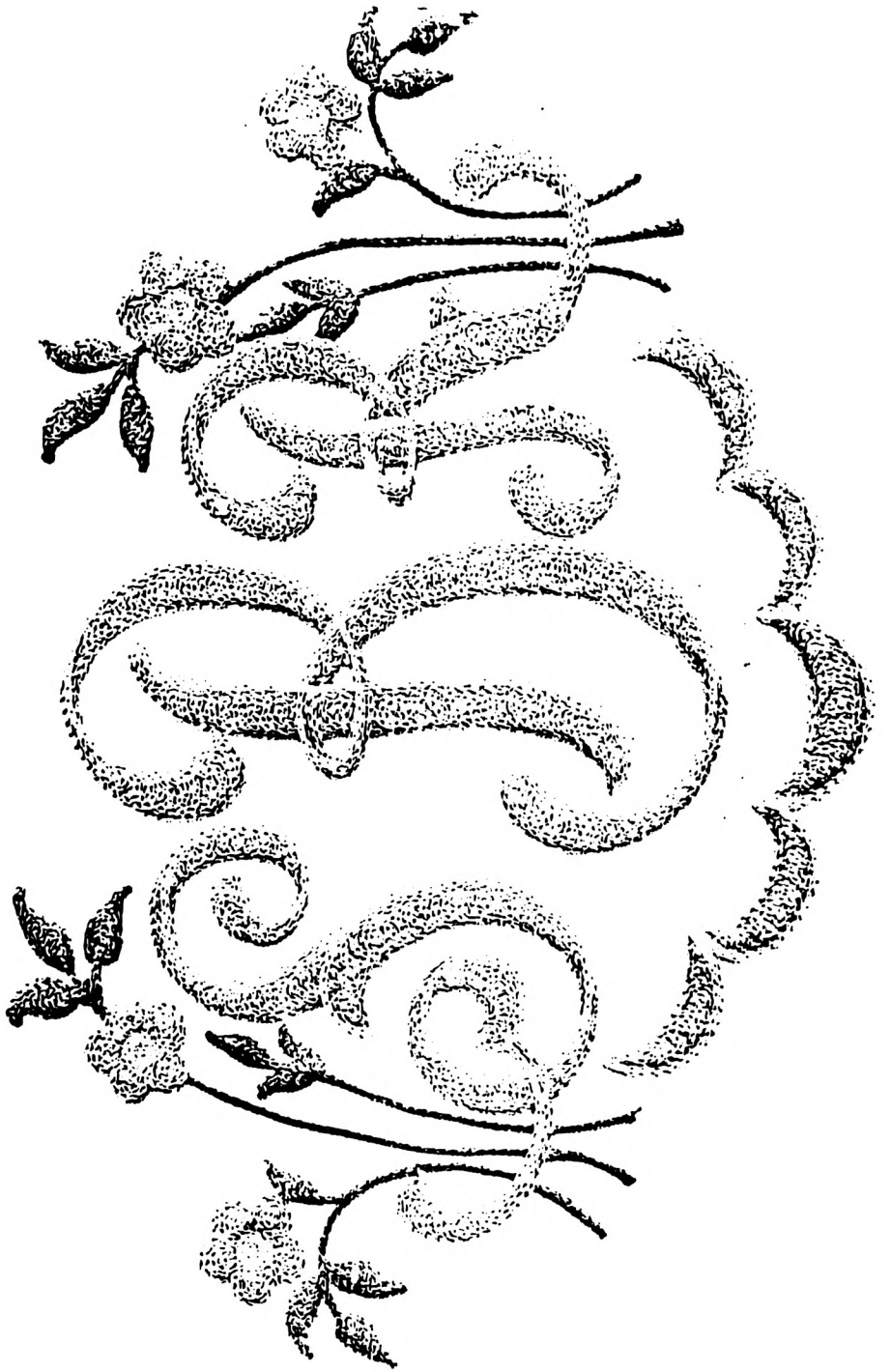

CHENILLE LETTERS & EMBLEMS

Manufacturing CHENILLE LETTERS & EMBLEMS is a COMPLETE INDUSTRY unto itself. I will cover most of the basics in this chapter, but . . . if you are planning to make this a major part of your business, I suggest you order, ARTISTIC TOUCH book number three. "MAKING EMBROIDERED EMBLEMS."

SHOULD YOU SPECIALIZE OR TRY TO DO EVERYTHING?

Due to the fact that GOOD CHENILLE WORK can not be done without making major adjustments to the machine, you must give some consideration to the following things and decide how you plan to handle this problem.

1. Have more than one machine so one can be used exclusively for doing chenille work and the other, chain stitch.
2. If you only have one machine, choose to only do chenille letters & emblems, or only regular chain stitch work.
3. If you only have one machine, and you want to do both, be very careful in setting up your production schedule.

You can do chain stitch and chenille work on jackets and other custom orders by using the same machine because you are not working on FELT. You can't just bounce back and forth from doing chain stitch embroidery on jackets and bowling shirts to chenille class letters and emblems.

Once the adjustments are made on the machine to do an order of school class letters or emblems, they should not be changed until the order is complete. The same settings can be used to do the chain stitch out-line and detail on the letters and emblems, but you can not work on thinner materials unless they are changed.

I have worked for employers who thought I could just stop filling in on large chenille letters and change the machine to chain stitch to write a name on a nylon jacket! Unless you really like that jacket . . . don't even think about trying to do this! You will probably end up buying it!

CHANGING THE MACHINE TO DO CHENILLE

In previous chapters about the LOOPER settings, (page 70) you were told how to switch the LOOPER so the machine will do chenille. To refresh your memory, on the post-war machines, pull the LOOPER OPERATING GEAR to the left and turn it until the SET SCREW drops into the NOTCH at the other end of the SLOT in the GEAR. In addition, the needle must be turned around so the hook opening is aimed away from the NOSE, instead of toward it.

For pre-war machines, see the instructions for manually changing the LOOPER setting on page 71.

ADDITIONAL ADJUSTMENT TO THE NIPPLE

To keep the felt (or scrim felt) from buckling on large chenille letters, the NIPPLE should be raised much higher than for normal chain stitch work. See the instructions for changing the NIPPLE ADJUSTMENT on page 65.

The NIPPLE must be higher to keep it from crushing the felt as you do the scrolling on chenille.

When you change the setting, use a piece of felt instead of the paper (as instructed for the chain stitch setting) and make sure the NIPPLE is not cutting into the felt or marking it with small indentations. It must be low enough to do it's part in the WALKING ACTION between the NIPPLE and the FOOT, but if it is too low the chenille will spread and your letters will become distorted.

On the pre-war machines, it appears that there is no adjustment for this, but . . . there is! You simply change the front SCISSOR LOOP SPRING to one with less strength.

ADDITIONAL ADJUSTMENT TO THE FOOT

On the parts list, you will find a spring, (#10) part number 8046. It is the FEED BELL CRANK SPRING. This spring is not used on the CORNELY machine, only SINGER.

When doing normal chain stitch work on the Singer machine, this spring is not necessary . . . it can, in fact, cause too much pressure on the FOOT and make it difficult to do fine detail work. BUT . . . when doing chenille letters & emblems, it adds a quick lift to the FOOT that you could not get otherwise. If you plan on doing a lot of this type work, be sure it is on your SINGER machine.

When doing chenille letters and emblems, the major adjustment for the FOOT, must also be changed.

You will find the instructions for doing this adjustment on page 63. When you do the adjustment, use a piece of felt instead of the paper as instructed.

Switch to the CLAW FOOT instead of the PRESSER FOOT with the RUBBER SHOE.

Raise the FOOT adjustment so the CLAW FOOT will move the felt, but yet not mark it (very much) with the teeth on the FOOT.

Once you have the adjustment about right, run the machine at top speed . . . watch to see that the machine does not STUTTER! If the machine STUTTERS at high speed, increase the pressure on the PRESSER FOOT SLIDE BAR THUMB SCREW until the STUTTERING stops.

If the machine actually sews BACKWARD at high speed, lower the foot a bit more with the major adjustment.

I am sure by now you realize you can't use the same adjustments on the FOOT & NIPPLE to do all kinds of work!

THE MOST IN-EXPENSIVE WAY TO MAKE CHENILLE LETTERS

There is a lot of work available in the chenille letter & emblem industry, but this work is almost always done in large quantities and the prices are very low because of the competition. So . . . if you are going to make money in this field, the most important part to learn is HOW TO KEEP YOUR COST AT A MINIMUM!

This is done by figuring out the fastest way to make the letter so you end up with it looking the way it should for the finished product.

The most IN-EXPENSIVE and FASTEST way of making chenille letters is to use scrim felt. Stamp the letter on the back of the felt IN REVERSE. Match the scrim felt to the thread color the letter is going to be.

Cut-out the letter following the stamping. Turn the letter over and out-line it with chain stitch about 1/16 inch in from the edge.

Change to chenille and outline the letter TWICE AROUND just to the inside of the chain stitch with chenille.

Fill-in the letter by using scrolling. Start by going completely around the perimeter, then fill in the center. Be sure to overlap the scrolling so you can roll the finished letter by bending it, and not see any missed areas.

When the chenille is completed, lay the letter on another piece of scrim felt that is the color for the border of the letter.

Re-outline the letter with chain stitch, right on top of the first chain stitch outline. Cut around the letter leaving about 1/4 inch of the second color showing all the way around.

A SECOND WAY OF DOING THE SAME THING

This method will accomplish the same thing. It takes additional time and an extra piece of material, but it is a bit easier on the operator.

Stamp the letter on the reverse side of the main color scrim felt as before and cut it out. Place the cut out letter on the second color of scrim felt.

Sew the two pieces of felt together, by outlining the

letter with chain stitch about 1/16 inch from the edge of the letter color. Change to chenille, double outline it with chenille and fill it in with the scrolling. You may need to reduce the pressure on both the FOOT & NIPPLE since you are sewing through two pieces of felt.

When you are done, lay a piece of TROYLON with HPO on the back and press it to the letter, being careful not to crush the chenille. Cut out the border as before. To the front appearance, both letters will look exactly the same. This way is easier on the operator since she has the excess of the border color to hold onto while doing the chenille. It cost extra for the TROYLON backing and it takes extra time to put it on, but this cost could be compensated by taking less operator time.

THE ORIGINAL WAY OF DOING THE SAME THING

When I started in the chenille letter making business, we didn't have scrim felt, only athletic felt. The design was stamped on the color for the chenille. That was placed onto the color for the border. Then we had to use BUCKRUM under the letter to keep the soft athletic felt from spreading.

First we outlined the letter with chain stitch. Then the excess material around the chenille color was cut away leaving the boarder background. Then we outlined it with chenille and filled it in. Then we placed a second piece of the border color under the letter and outlined it with chain stitch on top of the original outline. Then we cut out the letter leaving the 1/4 inch boarder. Isn't progress great? Scrim felt has eliminated the BUCKRUM and the extra piece of felt backing. The scrim felt makes this job easier plus it looks much better.

MATCHING WOOL & ORLON COLORS

When you are doing any chenille order, be sure to order enough thread from the same dye-lot to finish the job. I also include white and black in this. You may think all white and all black would be the same . . . wrong! The acceptance of dye colors by the wool depends on several

things. The amount of lanolin in the wool has a lot to do with the colors produced. Sometimes it will dye jet black, other times it will have a grey cast and another time it will have a brown or red cast. This can only be seen under a strong light. But it can be seen if you try to do part of a letter with one dye-lot and the rest with another.

The whiteness of the wool depends on the time of the year the sheep are sheared! Sometimes you will get a really icy white wool . . . other times, it will have a creamy cast to it. I almost drove Bob Yarborough at TROY nuts over this one time. I had started a job with ice white wool that I had in stock, then about half way through the job, I found that I could not match it.

A R T W O R K F O R C H E N I L L E

On the following several pages, you will find examples of chenille lettering styles, interlaced letters, shaded letters, megaphones, music lyres, cheerleader emblems, custom lettering lay-outs, accessories, inserts, caricatures, mascots & animals.

All of these different styles are shown in the ARTISTIC TOUCH LETTERING BOOK.

Many of them are shown in Book number three, "MAKING EMBROIDERED EMBLEMS." This book gives you instructions for doing chenille in much more detail and tells you exactly how each emblems or letter shown was put together from start to finish.

Artistic Touch VIDEO TRAINING TAPE number three, "CHENILLE EMBROIDERY," will show everything in full living color. The tape shows things I can only describe in the book. For some people it is easier to learn from the Video Tapes. But, as you read this book, I am sure you realize there are many things in it and the others that I could not put into the Video Tapes. Your education will be best served by having both the Book and Video on each subject.

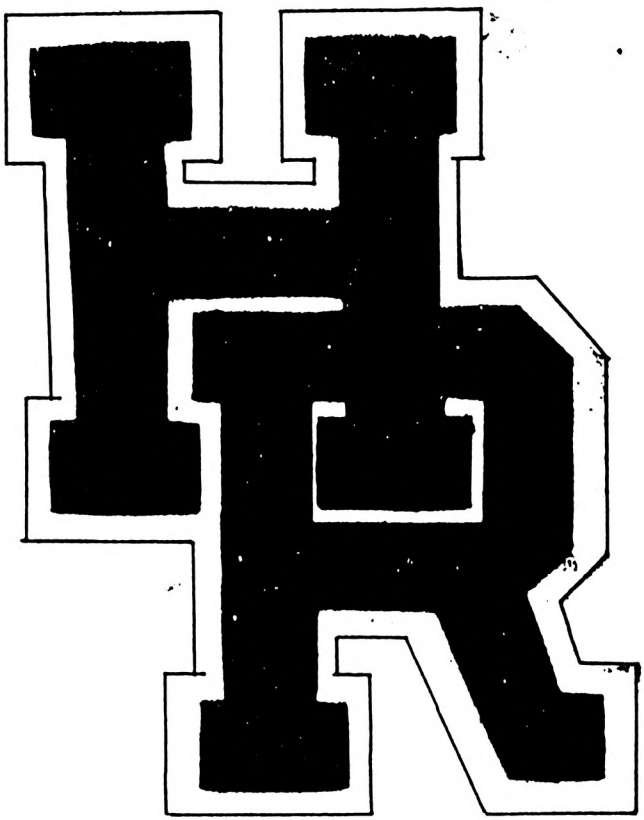

CHENILLE



REGULAR BLOCK

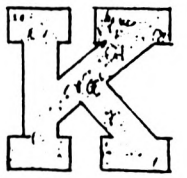

FULL BLOCK



OLD ENGLISH



SCRIPT

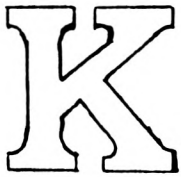

ROUNDED FULL BLOCK



FANCY
(ROUNDED)



FANCY
(SQUARED)



FULL BLOCK ROUNDED
SHADED
BOTTOM LEFT

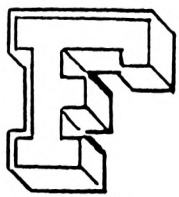

FULL BLOCK
SHADED
BOTTOM RIGHT



FULL BLOCK
SHADED
BOTTOM LEFT

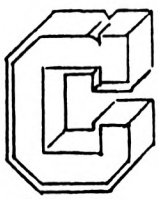

FULL BLOCK
SHADED
TOP RIGHT

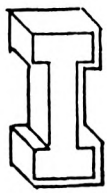

FULL BLOCK
SHADED
TOP LEFT

CHENILLE CHEERLEADER LETTERS



Full Block
1-color Chenille



Full Block Letter
with megaphone inside



Full Block Letter
over a large megaphone



3-Dimensional Letter
over a large megaphone



Crossed Megaphones
in chenille 1 or 2
letters included



Chenille Megaphone
Up to 4 letters included
(size refers to length)



Two Letter Monogram
over large megaphone



Three Letters
in chenille over
large megaphone

BAND AND MUSIC



Chenille Lyre



Full Block Chenille
small chenille lyre



Chenille Cleff
(Inlays extra)



Chenille Note
(Inlays extra)



Full Block Chenille
with music staff

SCHOLARSHIP



Full Block Chenille
Scroll with Script
Embroidery Letters



Full Block Chenille
Scroll with Block
Embroidery Letters



Felt and Embroidery
Scholarship Inserts



Gothic Chenille
1-color with insert

CHENILLE CHEERLEADER EMBLEMS



ACCESSORIES

CUSTOM ORDER LETTERING



CARICATURES



MASCOTS & ANIMALS



C A R I N G F O R
C H E N I L L E E M B R O I D E R Y
W A S H I N G & D R Y C L E A N I N G

Chenille lettering and emblems can be done in wool, orlon or rayon thread. Orlon is washable and so is rayon. But, before you tell someone that something done in chenille embroidery is washable . . . be sure that everything else you put into it is also washable. The felt (is not washable) the backing (some are, some are not) and the garment the chenille work is sewn onto.

I would rather be safe than sorry! I never tell anyone that any chenille is washable other than mercerized chenille on terry cloth.

Chenille just don't wash well. If another garment with a zipper or other hardware is washed with it, the chenille can be ruined.

S P E C I A L T I P S
F O R D O I N G C H E N I L L E W O R K

When doing chenille emblems, stamp the design onto white scrim felt then embroider the entire design in chainstitch. Put in all of the colors. Then put in all of the outline detail separations in the detail color.(usually black)

Change to chenille and fill in the colors. Do not cross over your detail lines, just drop the stitch and move to the next section.

If the emblem needs to have a backing when done, add a piece of TROYLON to the back and just re-outline around the perimeter. Cut around the border leaving 1/4 inch all around.

To sew the finished emblem onto a garment, leave off the backing, cut out the emblem and sew it to the garment following around the perimeter. Or use the zig zag machine to sew around the edge of the felt.

When you are doing chenille emblems, try to keep them simple . . . Small, close detail can be added on the satin stitch machine better than with the chain stitch. Even though close detail can be done, remember these emblems will be seen from a distance of at least six feet away. Details such as a rhinestone used for the headlight on a motorcycle will be noticed. Fine close detail in the riders face will not.

C O L O R S

COLORS for motorcycle clubs usually consist of three pieces. The top rocker, the bottom rocker and the club logo or mascot in the center.

They can be done on felt in wool or orlon, or on tackle-twill with rayon chenille.

If you use tackle-twill, put a border around the rockers and the emblem with the zig zag or merrow machine. It is best to put this border on first.

Many shop owners get concerned when they see a bike club pull up in front of their shop. I have found over the years, if you treat them like any other customer, they will be good customers and will return for repeat orders.

If they like your work, they will send many customers to you. Many clubs have made me an honorary member of their club. I don't attend meetings or anything like that, all they mean by bestowing this honor on me is that they will not allow members to purchase "COLORS" or jackets from anyone other than me.

APPLIQUE WORK

On page 85, I told you how to make press-on appliques. An applique is any design cut-out of, or embroidered onto one piece of material then applied to another.

Cut-out appliques are used quite often in dress embroidery. After they are cut-out of the material, they can be sewn onto the other material with the zig zag machine or with the chain stitch machine.

Which ever machine you use, the applique edge must be covered enough that the material will not ravel. Just a single line of chain stitch will not do . . . I like to cover the edge by zig zagging back and forth with the chain stitch around the applique or go around with circles spaced about 1/8 inch apart. Either put the circles to the outer edge of the applique or turned to the inside.

To hold the applique in place while you are embroidering around it, put welding film on the back or you can use spray adhesive.

TACKLE-TWILL LETTERING

Tackle-twill letters are also appliques. This type of lettering has become quite popular. The way we did this back in the "good old days," was to stamp the design in reverse on the inside of the garment. Then the tackle-twill was pinned to the outside. Next we embroidered around the letters with a single line of chain stitch. Then we turned it over and cut around the letters with applique scissors. Finally, we sewed around the letters with the zig zag machine. Felt lettering was also done this same way, except since felt don't ravel, the final zig zag was not necessary.

Then we got a little smarter! We cut the letters out first, then we placed them on a sheet of glass that had been coated with rubber cement. Then we placed the letters on the garment and sewed around them with the zig zag machine.

Now, die-cut tackle-twill letters with hot-press-on backing are available from TROY and other companies, in a variety of sizes, styles and colors.

TACKLE-TWILL LETTERING DONE ON THE CORNELY 121 BONNAZ MACHINE

Tackle-twill letters look best when sewn on with the zig zag stitch. If you use just the regular zig zag machine, this is one heck of a job. You must turn the material every time you get to the end of a side of a letter. doing this type of lettering all day can wear you out. But there is an easier way of doing it!

Cornely makes a special Bonnaz Machine that does a terrific job on applique and tackle-twill lettering. It is the Cornely 121 Machine. It has the handle for the operator to guide it like other Bonnaz machines, but . . . it makes a lock-stitch zig zag. If you are doing a lot of applique work, it would be advisable to purchase one of these machines. The work takes less than one-third the time it takes on a regular zig zag machine.

New Cornely 121 machines are available, as well as used ones. This machine can be used for many other things also. It will do a cording stitch and straight stitch and it can be set to do feather stitch. More information can be found in Artistic Touch book number four, "CORDING, BRAID & SPECIAL MACHINES."

DOING BONNAZ EMBROIDERY ON CAPS & HATS

When you do chain stitch embroidery on caps & hats, be sure to have the needle up into the nipple when you put the cap under the foot. You may have a problem with the bill of baseball caps being in the way, learn to fold the cap down out of the way so the area you are working on is flat. Don't sew through the sweat band . . . turn it so it is out of the way. Names and monograms are easy on caps with the chain stitch machine, but intricate designs are

best done on the satin stitch machine or the computerized automatic machines.

Straw hats can be embroidered with chain stitch. Use a larger stitch to keep from cutting the straw with the machine. When trying to do designs, don't try to stamp or draw the design on straw hats or even felt hats. Draw the design onto TEARLON, position it in the correct spot then embroider through the TEARLON. Remove the excess when you are done.

When you do embroidery on the brim of a hat, you always have the problem of deciding which side to do the embroidery on. The answer is, either side . . . or both!

The brim can be seen from both sides, so I almost always embroider first the top of the brim, then trim away all of the threads, then I follow the design and re-embroider the underside. This way the embroidery is the same , top & bottom!

On some western hats, I only embroidered the bottom of the brim. Then rhinestones were placed around the design and the hat was blocked so the sides rolled up and the embroidery could be seen.

When working on thick felt hats like Stetson's be sure to raise the NIPPLE so it will not cut into the felt.

S P E C I A L P O S T - M A C H I N E S

There used to be a machine made by Cornely that was used for hard to get at places like caps, the crown of hats, sleeves and to embroider names on gym socks. It was called the "POST MACHINE." These machines were Cornely "E", "RE", & "BCH." New machines are not available, but used ones can sometimes be found.

Instead of the flat base like the regular machine, the LOOPER is enclosed in a raised POST. You slip the item to be embroidered onto the post and do the embroidery. The machine is also great for writing names on jackets and

shirts. With this machine, you don't need to un-button jackets and shirts to write names on the front . . . just slip the garment onto the post.

When I had my Cornely BCH post machine, (I sold it to a competitor) I would write names on pockets and sew emblems on them without sewing the pocket shut.

In addition to the post-machine, there were also machines called "CUT-DOWNS." These machine were generally modifications made by people. Although I have one that was factory-made by Singer, and I also had one that was made by Cornely. On these machines, the base is cut away as much as possible on the front and back leaving just a strip of the base about three inches wide above the LOOPER OPERATING SHAFT & LOOPER ASSEMBLY.

You can slide sleeves onto this thinner base to embroider on them. This can also be used for many other things as well. You can also write names on shirts & jackets without un-buttoning them. If you have an old machine that you can spare for just this, you can make your own.

W O R K I N G O N H A R D T O D O I T E M S

Most of the time when things are hard to do, it is because you are working on too much material or too little material.

Too little, is easy to solve the problem . . . use a larger piece of backing material.

If the problem is too much material, as with banners and quilting bedspreads and such, you may need to build a larger table around your machine. I have even built trapeze set-ups to hold the material when I have been working on very large banners.

You may have to turn garments inside out in order to embroider on them, and you may have to at times open seams or remove pockets to put the embroidery in a certain place. Where there is a will . . . there is a way! Use your imagination!

HOW TO FIND A JOB AS A "BONNAZ" MACHINE OPERATOR AND MAKE MONEY & HAVE FUN WITH THE CHAIN STITCH MACHINE

Although I have always found it more profitable to stick to producing custom work, I have from time to time taken flyers into other things for short periods of time.

Even though I had fun and made money doing some of the things I am about to tell you about . . . the pace I had to work at was hectic and I soon found myself longing for the peace & quiet of doing creative, custom work. I enjoyed doing these other things for a while, but I personally could not take a steady diet of doing this type of work.

One summer, I operated the "HAT SHOP" at an amusement park in Phoenix, Arizona! How did I manage to find a job in Phoenix when I lived in Los Angeles? . . . This is a little tip that almost always works for BONNAZ machine operators. If you would like to relocate to any other city in the United States, You can usually have a job waiting for you when you get there!

Spend a little time on the telephone! Get a directory from the Phone Company for the city you would like to move too, or visit. First, call the companies that sell & do repairs on industrial sewing machines. Ask them if they know of anyone in town looking for an experienced Chain Stitch, Bonnaz Machine operator. I have found quite a few jobs by doing this. That is how I found the job in Phoenix.

If you don't have any luck there, call the shops listed that do embroidery & monogramming. In all of the years I was working for other people in this business, I never wore out shoe leather looking for work! I always found jobs by making phone calls. Bonnaz machine operators have always been hard to find, GOOD ONES, even harder! If a shop has work . . . they don't care what you look like, or anything else. If you can do the work, they will hire you over the phone!

Later on after I became the owner of my own shop, many times when I would be rushing to get an order done, I would instruct my employees to tell people I was not there! . . . but, there was one way a person could always get through to me . . . tell whoever answered the phone you were a Bonnaz machine operator! . . .

I ALWAYS needed operators! I would hire anyone who said they could operate the machines, sight un-seen! If they told me they could operate more than one machine, or all of them . . . I would send a taxi to pick them up!

I never had any problems by doing this. All of the people I hired in this way turned out to be good employees who worked for me until changes in their life took them on to other places.

I was generally, pretty lucky with the employees I hired. One lady, Estella, worked for me until she was seventy-five years old. Another one, Jane, worked for me until she was about sixty-five. her husband finally made her quit because he had retired and he wanted to do other things.

From time to time, I would have a problem with girls hired to do thread trimming and mediocre jobs, but only on two occasions did I have a problem with an operator. One lady learned to operate the chain stitch machine well enough to write names, but anything else she tried to do always looked like HELL! I pulled my hair out trying to teach this lady, and she tried harder than anyone I have ever known to learn . . . she just could not do it! This is the only person I have ever ran across that just could not ever manage to learn to do saleable work.

Then there was the time one of my competitors, tricked me into paying her minimum wages while I taught her how to operate the chain stitch machine!

Getting back to the Amusement Park in Phoenix, I worked there during one summer. I sold all kinds of hats & caps

I embroidered names on them while the customer waited. This is an operation that can be set up in department stores, shopping centers, flea markets, carnivals and many other places. Set up an attractive display and place the machine so people can watch as you do the embroidery. You will have fun . . . and make lots of money! The noise the machine makes, attracts customers to you, so even when you don't have a customer waiting . . . keep the machine going!

For many years, Bonnaz machine operators have done work like this anyplace where there is a crowd of people. Many clubs & organizations (even dog shows) will agree for you to set up a booth at their annual events. Of course you will have to pay them a percentage. All most every State Fair or Community event will consider having an embroidery booth, they are real money makers! Many other things besides just hats & caps can be sold depending many times on the occasion. Towels, aprons, head scarves and a thousand other things are natural's for these booths.

When you do something like this in addition to your having an embroidery shop, be sure to have business cards or brochures for your business where people can pick them up without asking for them. Seeing you at the State Fair will bring you business from all over your State!

One man made a very good living for many years in New York City. He had a hole-in-the-wall in Times Square! By hole-in-the-wall, I mean, he barely had room for him and the machine and his caps . . . but he stayed busy all of the time! I am not sure that he is not still there!

Another year, I operated a booth in Capwell's Department Store in San Francisco. The booth was opened the day after Thanksgiving and I wrote names on Christmas Stockings, towels, bar-b-que aprons and many other items. The things you can do that are fun and unusual are endless.

Almost any idea you come up with along these lines will work, at least for a while. You can either pay rent for the booth, or most of the time, you will have to pay a percentage. Sometimes you will have to pay both.

MAKING FLAGS & BANNERS

Making custom embroidered flags & banners is one of the most lucritive parts of this business. If you are interested in this, write to me and I will be glad to send you the Artistic Touch price charts, to give you some idea of what you should charge.

The prices are figured according to how intricate the design will be. I have charged as much as $2,500 for a very intricate design embroidered in many colors for one organization. A large city was charged $5,000.00 for a 20' X 30' American Flag with Satin Stitch embroidered stars.

A FLAG has a piece of re-enforcing material sewn to one end, so that end may be attached to a pole. Everything else is considered to be a BANNER.

Flags are usually made of nylon or cotton materials for outdoor use. Banners are made of almost any material, including felt. The choice of the material depends on the customers desires. When a banner is to be for outdoor use, it is best to use nylon. Banners for indoor use, look best when made of tackle twill or satin.

Applique banners are made by cutting the letters and different parts of the design out of one or more colors of material then sewing them onto the background color with the zig zag machine. This can be done much faster by using the Cornely 121 Bonnaz machine. When working on a piece of material 20 feet by 30 feet, each time you have to turn the material to sew around a letter, gets to be a monumental task . . . with the Cornely 121 Bonnaz machine, you don't need to turn the material! You just guide the machine around the letters with the handle.

You can use tackle twill letters on any other material, or you can cut the letters out of the same material you are using for the back ground. We used to do applique lettering the hard way! The lettering and design was stamped onto the material, of the color for the letters.

Then the material is placed on top of the background material. The two pieces are pinned together, and the letters are outlined with the chain stitch machine.

The excess material around the letters is trimmed away with applique scissors, then the letters are re-outlined with the Cornely 121 Machine or the zig zag machine.

A SINGLE CONSTRUCTION, reversible, flag or banner can be made using the same method. This flag or banner will read correctly on one side, and in reverse on the other. Simply add another piece of material the same color as the lettering and make a three piece sandwich. Sew the lettering and trim away the excess material on both sides and finish with the zig zag stitch. Be sure to use the same color top and bobbin thread.

A flag or banner may be any size, the most popular sizes are 3' X 5' and 5' X 7'. To put the re-enforcement on the side of a flag, You can use canvas, heavy twill or several thicknesses of the same material the flag is made of.

Be sure to use a good thread like Spun Poly, Filco or Oncore for the construction. When making flags, sew rows of stitching side by side, on the re-enforcement strip, and attach it with several rows of stitching to the flag.

When the wind starts whiping a flag, strange as it may seem, anyplace where air can get into a seam and cause an air pocket, is apt to tear! Not so much on the lettering as on the seams around the edges. especially, the whip end. Keep your hems as small as possible, and if you put a hem any wider than one-quarter inch, go back and sew another line of stitching between the stitching for the hem and the edge of the material. If you leave that quarter inch air pocket . . . the flag will tear!

There is no way to construct a flag so that it will not start tearing eventually on the whip end. Knowing about these things I have learned from experience, will at least make your flags last longer than average. Some of the best known flag manufacturers in this country, still put one-half inch hems in flags . . . is this planned obsolescence? . . . or haven't they ever figured this out?

In telling you how to make a reversible flag, I almost forgot to tell you the easy way of lettering flags and banners that we use now.

You can turn any material into adhesive backed press-on material by pressing WELDING FILM, available from TROY, onto the back of it.

Cut the letters out of the material, press them onto the background color and sew around the edges. For making reversible flags or banners, the old way is still the best.

Large size die-cut tackle twill letters with hot press-on backing are available from TROY. This makes simple banners even easier to make.

To hang a banner, you may use grommets spaced at regular intervals across the top, or you can sew a pole sleeve. The sleeve should be about three inches deep, so the pole will slide in easily.

The bottom of a banner may be straight or scalloped, and fringe is optional.

A DOUBLE CONSTRUCTION flag or banner is two pieces of material sewn together. The design can be sewn onto both sides or the back side can be plain.

Chain Stitch embroidered flags or banners should always be DOUBLE CONSTRUCTION. The back of Chain Stitch work is not very attractive, it should have a backing to hide it unless it is to hang against a wall. I did see a banner once, carried in a parade, with Chain Stitch embroidery and nothing covering the messy looking back. I must say, it attracted a lot of attention! I can't remember what the front looked like, or what it said, but I certainly do remember that messy looking back and I'll bet a lot of other people who saw it remembers too!

Applique letters can be sewn onto banners with the Chain Stitch machine by making a zig zag by moving the handle quickly first to the left then to the right as you sew.

Chain Stitch and Satin Stitch can be done so it is reversible. This is not easy to do, but it can be done. Since this is the Chain Stitch Book, I will tell you how to do reversible Satin Stitch in the Satin Stitch Book. To do reversible Chain Stitch, DO THE REVERSE SIDE FIRST. Trim all of the threads from both the front & back as you go. You can not use a backing material. When the reverse is finished, turn it over and follow the design exactly as it was done on the reverse. Don't fill it in as closely, so the back will not be packed down. Trim all threads as you work. You will be surprised at how good this will look, even on multi-color designs!

Many times I use combinations of different things on flags and banners. I may do applique letters with the design done in Chain stitch or Satin Stitch embroidery, or I may even do the center design on a separate piece of material then applique it to the flag or banner. Use your imagination.

In-expensive banners can be made by using FLOCKED HOT PRESS-ON material to cut out the letters. These can be pressed onto the flag or banner. You can sew around the edges, but it is not really necessary. This makes a good looking parade banner for one time use at a much lower cost.

If you get into the flag & banner business on a larger scale, you should consider learning to make screen printed flags & banners also. I'm not going to give you a crash course in screen printing here & now, but I will give you a few suggestions. Reversible banners can be screen printed . . . by first printing the table! then lay the material carefully in place, print the material and the design will be on both sides. Reading correctly on one side and reverse on the other.

To produce individual banners (single orders) you can have a supply of letters in stock printed on heat-transfer paper so they can just be pressed onto the material. These look like custom, screen printed banners, but with no where near the work.

Q U I L T I N G

Custom quilting is another thing that is done on the Chain Stitch embroidery machine. Bonnaz quilting is used on upholstery as well as quilts, comforters & bedspreads. Free-hand quilting designs are also used in dress embroidery as fill-in, or material cover designs.

Usually, when doing quilting, you will be working on several thickness' of material. The top material, the batting and the backing material.

You will find the machine will work better with the claw foot. You will also find it necessary to raise the nipple and foot. Due to this, it is not a good idea to try to switch back & forth from quilting to regular work.

When quilting a material that has a printed design, outline around the major parts of the design to highlight them. Don't get carried away with trying to outline everything in the print. Quilting is supposed to be "puffy!" Just outline enough that it looks good without flattening the material too much.

Don't get carried away in the other direction either . . . if you don't detail the centers of flowers, and you round things off to much, it looks like you are trying to rush too much!

When quilting large pieces of printed material, it will look the best if you start at one corner. Work your way down the side of the fabric by outlining one side of the first flower in the first row. Then start staggering the outlining by doing one side of the second flower in the second row. Do this all the way to the other end of the material, then work your way back by doing the other side. When you get back to where you started, go through and do the staggered flowers that were missed the first time through. Keep repeating this until you have completed outlining the entire piece of material.

As you complete each section, roll the material and pin it so it stays in place.

The Vermicelli designs shown on the following pages, are used sometimes to fill-in the background areas on large printed designs when you outline the design. this makes the design stand out. They are also used alone when quilting solid color fabric, and they are used in dress embroidery. When doing a large king size bedspread, the vermicelli will be much larger that when you put the same design on the yoke of a shirt.

When doing vermicelli, the beauty is in the spacing . . . keep the same spacing throughout the entire piece. Don't start small and keep getting larger, keep it uniform.

You charge for quilting by the yard. Right now, depending on how intricate the design, the wholesale price is about $12.00 per yard. This will also depend of the prevailing prices in your area.

Who do you do quilting for? You generally would work with interior decorators. Some of your work will be done for retail customers, but most will be wholesale through the decorators.

Most of the time, quilting is done free-hand, but sometimes, designs will have to be stamped onto the material so you can get them proportioned correctly. Quilting patterns are done by what I call a step and repeat process.

You don't try to make a pattern to cover an entire king size bedspread! The pattern should be made about two or three foot square. Be very careful to draw the places where the pattern will connect together, so they will connect and not be noticeable. When you stamp the design onto the material, you stamp one section then move the pattern to the adjoining section. Be sure everything connects correctly.

Now you have a problem of how to stamp the material and embroider it so the stamping will not show. Powder won't work . . . with all the handling, it will be gone before you finish the spread! White or blue stamping paste will show around the embroidery because quilting is just a single line of embroidery!

This is where the MAGIC, or BLACK-LIGHT stamping paste comes to the rescue! It can only bee seen under the black-light. You have the stamping there so you can see it while you work, but as soon as the black-light is turned off . . . it is gone!

If you decide to do very much quilting, you will HAVE TO ENLARGE YOUR TABLE. To do quilting comfortably, you need eight to twelve more feet of table in front of you and on your left side. You can make it even better if you also extend the table behind you about eight to twelve feet. The best size table to do quilting would be twenty feet long, and twelve feet wide, with space cut out for you to set at the machine in about the center of the right side. The larger the table, the easier it will be for you to handle the material. If you can cover the entire table, including the machine table with masonite, the material will move without anything to hang up on.

When doing quilting, try to hang your lights down from the ceiling, rather than being attached to the machine table. You will also find it better to drill a small hole in your table on the right side of the machine, to keep your threader wire . . . if you tie it to the front plate screw, and throw it over to the back of the machine, as we do for other work, the hook on it can catch in the material you are working on.

Another time saving tip I will pass on to you . . . when working on quilting or any other bulky item that takes time to get it under the foot, what do you do when the thread breaks? Remove all of that material, thread the machine then put it all back? . . . hardly! Just use your thread knife (also called foot knife) to punch a hole in the material where the threader hole is. Put the threader wire into the hole, thread the machine and you are ready to sew again. Be sure to punch that hole in a spot where you will sew over it later.

I have worked in places where I did quilting, but to me it is very boring! You are doing the same thing over and over again. One season, in one of the dress houses, all we did was cover full circle skirts with large chain stitch vermicelli . . . I personally like more variety!

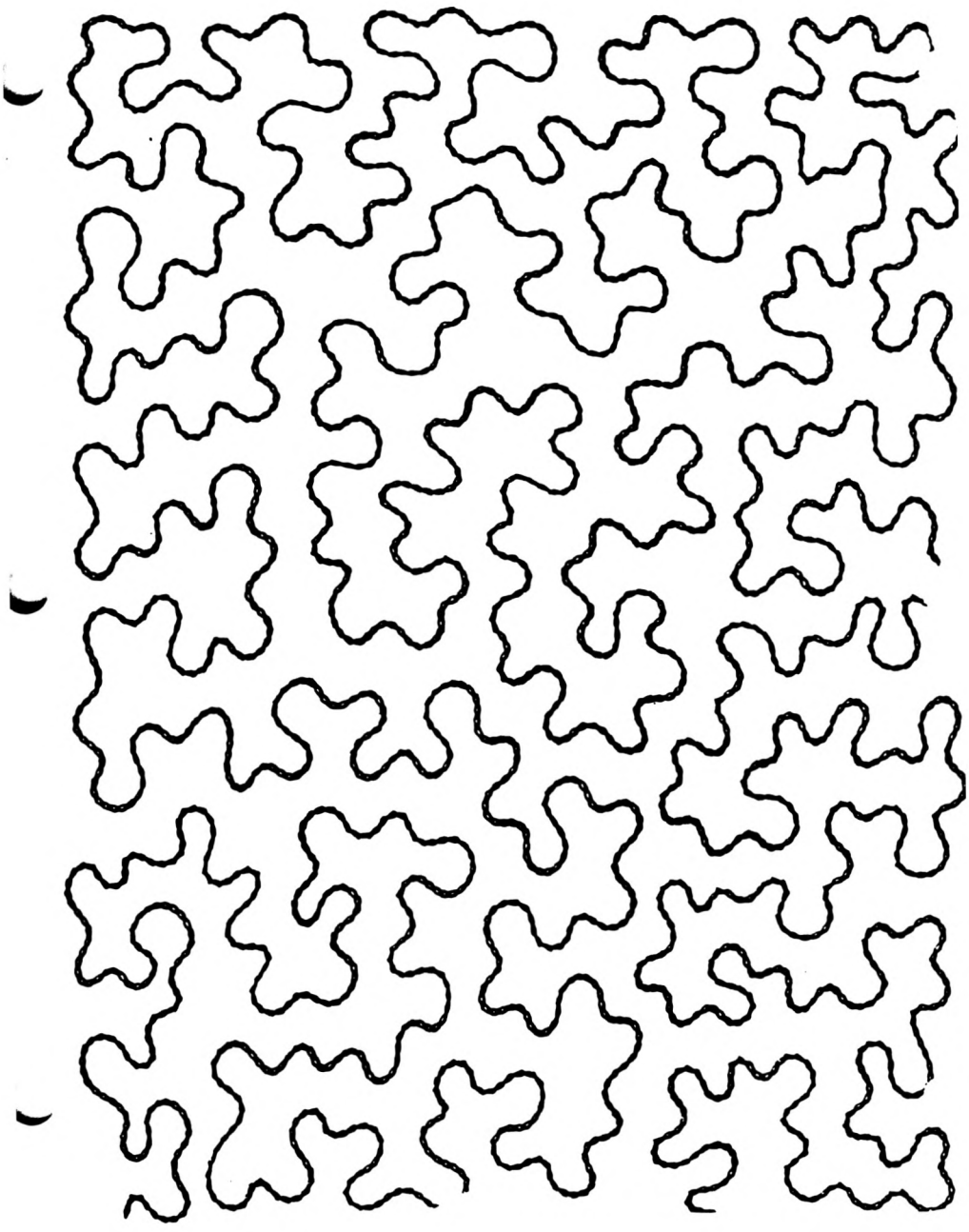

S E Q U I N S , R H I N E S T O N E S ,
N A I L - H E A D S ,
B E A D S & P E A R L S

Sequins, beads & pearls can be sewn onto garments by using special machines designed and manufactured by the Cornely Company. These machines are guided with a handle the same as the chain stitch machine. They are fully described in Artistic Touch Book number four, Cording ,Braid & Special machines.

In addition to being sewn on by machine, sequins, beads, pearls and rhinestones and nail-heads can also be added individually with special kick-presses designed for this purpose.

They are all used , both ways, in dress embroidery, Country & Western wear and bridal apparel. Mostly, they are used for dramatic effect, especially on theatrical costumes.

I have a full color design of a peacock on the wall in my shop. The bird is dotted with "aurora-borealis" rhinestones. This is the first thing people see when they walk into the shop. The flash of the rhinestones attracts their attention . . . this is the number one reason for using any of these bright shiny objects . . . they attract attention!

Country & Western embroidered designs are highlighted with rhinestones about one-quarter inch apart all around the design.

They can be used in other ways also. You may want to add a green rhinestone for the eye on an embroidered tiger, or on the headlights of an antique automobile or motorcycle.

All of these items should only be used on garments that are to be dry cleaned, they are not washable.

TROUBLE-SHOOTING
MACHINE PROBLEMS

QUESTION: When I turn the handle toward me, the machine does not sew toward me?

ANSWER:
1. Be sure you are setting properly aligned with the machine. If your arm is not in a straight line from the handle to your shoulder, the machine will go to the left or right of center.
2. Hold the handle aimed toward you. The NOSE should be aimed EXACTLY forward. If it is not, turn the handle around, loosen the screw on the back and re-align the handle. Tighten the screw.
3. Occasionally, the handle will need to be aligned to the operator. I have known many who could not sew a straight line toward themselves, unless the handle was set slightly to the right or left of center. Don't do this unless you are sure the machine will not work for you any other way. I really think anyone can guide the machine with the handle aligned correctly, I think it was a habit those people let themselves get into that caused their problem.

QUESTION: The needle will not pick up the thread and make the chain?

ANSWER:
1. Re-thread the machine, the thread may have just slipped out of the eye of the looper.
2. Is the needle broken or bent?
3. Is the looper set on chenille?
4. Is the needle aligned properly, and tight in the needle bar. If the needle is loose, it can turn and not pick up the thread.
5. Does the looper need to be cleaned?
6. Does the nipple & needle shaft need cleaning?
7. Is your machine an old Cornely? If so, some of them will not pick up the thread unless the thread is in the slot in the needle plate in front of the needle hole.

QUESTION: My machine makes a short stitch going in one direction and a long stitch in the other?

ANSWER: 1. Your feed recovery springs could be worn out.
2. The feed lever bracket guide may have slits cut into the holes by the springs. If so, it must be replaced. This is a major repair.

QUESTION: My machine stutters, (sews in one spot) when I try to go fast?

ANSWER: 1. Try increasing the pressure on the foot.
2. Lower the foot slightly. DO IT THE RIGHT WAY!, don't just clamp it lower! see instructions on page 63.
3. The pulley on your motor could be too large. Pick up a slightly smaller one at the hardware store. If your machine has a motor & clutch, instead of a clutch-motor, the pulley would be too small.

QUESTION: My machine won't go as fast as I would like.

ANSWER: 1. Very few operators are able to control the machine at the top speed the machine is capable of sewing unless they are doing fill-in on chenille. If your machine will not sew fast enough, change your pulley on your clutch motor to a larger one. If you have a clutch & motor, change to a smaller pulley.

QUESTION: My machine cuts the material with the nipple?

ANSWER: 1. You may be using too large of a hole in the needle plate. Even if your nipple is set correctly, this will cause it to cut the material. Change to the right hole.
2. The nipple could be set too low. See the instructions on page 65.

QUESTION: When I work with rayon thread, the thread looks fuzzy?

ANSWER: 1. See if the hook on the needle is bent. Compare it to a new needle.
2. See if the needle is aligned correctly.
3. Are you using the right size needle & nipple?
4. Does the machine need cleaning?
5. Is the tension too tight?
6. Is the thread looped around the thread controller spring or one of the eyelets?
7. Try a different needle.
8. Try a different nipple.
9. Try a different cone of thread.

QUESTION: I can't seem to make square corners on block letters?

ANSWER: 1. Work on the adjustments for the foot on page 63 and the nipple on page 65., When you get these just right, you can make square corners with no problem.

QUESTION: The thread keeps breaking.

ANSWER: 1. Be sure the machine is clean, the needle is O.K., you are using the right size needle & nipple, and the needle is STRAIGHT and not hitting against the needle plate at any point.
2. Are you using very old thread?
3. Could your thread be weakened from sun-fading? This can happen when thread is exposed to sunlight everyday without being moved, it will weaken one side of the cone.
4. See if there is a place on the cone where the thread has been broken and tied when wound on the cone. If so, peal off the thread until you get past where the tie is.

QUESTION: My machine keeps breaking needles?

ANSWER: 1. Remove the looper assembly and thoroughly clean it. See instructions on page 72.
2. Be sure you have not turned the needle bar around. By tightening the screw against the needle bar to hold it, they get slightly bent. they should never be turned. Makes the needle crooked!

WHERE DO YOU SELL YOUR WORK ?

In addition to the suggestions I have already given you in this book, there are a thousand other potential sales for embroidery work.

If you tried going door to door in the business section of any town, you will find that three out of every five businesses uses embroidery work in some way.

You can set up a retail store and cater to just retail customers, or you can just sell to wholesale accounts or you can do both.

The second best form of advertising is your local phone directory. I have never had good results with newspaper ads. Radio commercials work when directed at a special audience. One year I was talked into advertising on the "Bowling for Dollars Show" on T.V. I even let them talk me into giving away a free embroidered shirt to any bowler that bowled a 300 game on the show . . . I gave away a lot of shirts! but . . . I didn't sell ANY!

The best form of advertising is "word of mouth" advertising from your satisfied customers. The other advertising method that has given me good results is direct mail advertising to business's that can use my services. Go through your phone directory and make a list. Don't forget Advertising Specialties Companies, Associations and Athletic Organizations, Screen-printers, and Tee shirt shops. There will be thousands of others in your directory.

WHERE TO FIND
SERVICES & SUPPLIES

THREAD, MATERIALS, SUPPLIES

Troy Thread Company
2701 N. Normandy Ave
Chicago, Illinois 60635
1-800-888-2400 Call them for a free catalogue!

MACHINES, REPAIRS & SERVICE

Artistic Touch
9908 S. Broadway
St. Louis, Mo. 63125
1-800-421-1991

A & B Sewing Machine
2200 Washington
St. Louis, Mo.
(314) 231-7093

Sewing Machine Exchange
1840 S. Michigan
Chicago, Ilinois, 60616
(312) 842-2700

Singer Industrial Machine
Murfreesboro, Tenn.
U.S.A. 1-800-251-8523
Tenn. 1-800-342-1654

MAGAZINES

S.T.I.T.C.H.E.S
5951 S. Middlefield Road
Littleton, CO 80123
(303) 798 1274

You should definitely subscribe to this magazine. In the short time it has been published, it has become a necessity to the embroidery industry. Keep in touch with what is going on!

INFORMATION

N.A.M.E.
North American Monogrammers & Embroiders Inc.
56 E. Jefferson
Franklin, Indiana 46131

SOME SAGE ADVICE
FROM AN OLD TIMER

I am sure you have noticed all throughout this book I have stressed QUALITY! This is the revised edition of the book. After the first edition was published, I was accused of trying to show off . . . I was told the book sounded like I thought nobody was as good an operator as I was. These people completely missed the point I was trying to get across.

I have been around long enough that I have seen a lot of things happen in this business, I know there are pitfalls! I have seen people in this business cut their own throats, over & over again. When you read the rest of this, I am sure you can figure out where those complaints came from. All I can say to them is . . . " If the shoe fits, wear it!"

One thing all of the people who taught me this work had in common, was they were all good people who believed in the "GOLDEN RULE!" Barney Zonaz had a saying, "One hand washes the other!", Dave Davidson, always said. "What goes around, comes around!" Nudie always said, "Two wrongs don't make a right!" his wife, Bobbie said, "A time will always come when you have to face yourself!" These were all different sayings but . . . they ment the same thing. You have to be honest and fair in business or whatever you do, will come back to haunt you! Not only in business, this is life!

Several times, I have seen wheelers & dealers get into this business and louse it up for everybody for a while. They teach everybody they can find who can set at the machine, how to operate it well enough to produce a bunch of junk, then they start cutting prices.

Since they have these people running the machines, they start producing a bunch of junk as fast as they can sling it out. Since they are cutting prices to the bone, they only pay these operators minimum wages. Then they rush them to produce as much as possible with no regard for quality.

Since the operators are being paid minimum wages, plus being rushed, they could care less about what the work looks like.

All of a sudden the market is flooded with millions of sets of "HIS & HERS towels, hundreds of thousands of "POODLE SKIRTS" and many other fly by night get rich quick deals.

After a while, the public sees so much of this junk, they don't want anything with embroidery on it. You even start hearing jokes about it. This is over kill burn out! I have seen it happen several times since I have been in the business.

When the public stops buying, the wheeler dealers go on their way looking for another industry to kill! it takes several years of work by those dedicated to the industry, to bring it back.

What can be done about it? I haven't the slightest idea in the world! I wish there was a solution . . . I guess it is just something we have to learn to live with. But . . . since we do have to live with it, there is only one way we can survive!

Q U A L I T Y !

If you always make an effort to produce quality . . . your customers will keep the wheeler dealer from going very far. If your customer knows what embroidery work is supposed to look like, the wheeler dealers can't sell them their junk at any price!

Every time you do something, promise yourself to do a little better the next time. By doing this, you will produce quality. I'll tell you a little secret . . . I have never been completely satisfied with anything I have ever done! I always look at each job and see places where I could have done better. If I am ever completely satisfied . . . that's the day I will hang it up!

Let the wheeler dealers do their thing, don't be suckered into the trap with them. The best advertisement AND INSURANCE you can have is satisfied customers!

ANOTHER TRAP TO AVOID

There is another trap that so many shop owners fall into and there is really no reason for it.

I have fallen into this trap myself and just about every employee I have ever had has fallen into it.

A customer comes into your shop, looks at all of your samples, picks something out and ask the price. You tell her the price and out of a clear blue sky, she says, "That's too high!"

Well! . . . grab your marking pen and start marking down everything in the shop! . . . Your prices are too high! A customer said so!

Who appointed this customer that probably saw embroidery work for the first time ever in her life, an authority on how to price it?

There are some people, who will say your price is too high, even if you offer to pay them to let you do it!

Nudie was talking to a reporter and he told him we were making a pink velvet & silk embroidered dress for a wealthy "Texas Widow." The reporter asked Nudie what he was charging for the dress. Nudie told him the price and he was shocked! He asked what makes the price on that particular dress so expensive? Nudie replied . . . I do!

Nudie taught me to never sell myself short. He offered a combination of services that couldn't be beat. Plus he surrounded himself with the finest master craftsmen he could find. He was willing to pay them for their talent and for a job well done. We always produced quality!

When you put together a quality operation, you charge what you feel your services are worth . . . and a person is worth whatever he can get someone to pay him.

I hope each & every person who learns chain stitch embroidery from this book becomes a millionaire, I've seen it happen! Best of luck to all of you!

600 Denier Rayon Yarn

✂ **Properties:** Provides a shiny finish. Sheen may cause slippage resulting in knotting or twisting—cover yarn with knit elastic tube; or notch bottom of tube, passing yarn over top, down through center of tube, and out through notch .

✂ **Uses:** Chainstitch yarn preferred for higher style garments, such as satin jackets and bowling shirts. Also used for Merrowing emblems.

✂ **Size/Composition:** 600 denier filament rayon yarn. Denier refers to weight of thread.

✂ **To order:** Specify **RA6** plus the following item number:

0001 White	**1073** Mist Grey*	**1315** Gold Brown
0002 Black*	**1107** Royal*	**1322** Eggshell
1000 Cream	**1135** Light Orange	**1355** Lemon*
1001 Beige	**1144** Emerald*	**1364** Blood Orange*
1002 Peach	**1155** Navy*	**1372** Rose
1003 Peacock	**1175** Charcoal Grey	**1392** Light Blue
1004 Fuchsia	**1185** Burnt Orange	**1425** Gold*
1005 Evergreen	**1193** Scarlet*	**1452** Empire Blue*
1006 Deep Cardinal*	**1224** Turquoise	**1515** Tobacco
1007 Spring Green	**1237** Light Pink	**1547** Purple*
1008 Chocolate*	**1249** Sandstone*	**1844** Spruce Green
1009 Tan	**1259** Rubytone*	**1900** Copper Brown
1017 Antique Gold	**1272** Cocoa Brown	**1999** Old Gold

* Color available for Merrowed border of emblem blank.

Minimum dye lot quantity for non-stock colors: 50 king spools. Inquire.

✂ **Color card:** Specify **CCP-RA**; price, $2.00.

✂ **Unit put-up:** Priced and sold by the 8-ounce (3500-yard) king spool, 100 to a case.

✂ **Price per unit:** Each color is priced separately.

	1-11	12 & over	Full Case
White	$5.95	$5.40	$4.25
Colors	8.40	7.20	5.75

1200 Denier Rayon Yarn

- **Properties:** Provides a shiny finish and full cover. Exactly twice as thick as 600 Denier Chainstitch Yarn ("denier" refers to weight).
- **Uses:** Upper looper yarn for overedging (or merrowing) stiffened fabric. If color is not available in limited 1200 Denier line, two spools of 600 Denier may be substituted by running them together through the upper looper.
- **To order:** Specify **RA1** plus the following item number:

0001 Snow White	**1107** Royal	**1193** Scarlet
0002 Black	**1144** Emerald	**1425** Gold
1008 Chocolate	**1155** Navy	

Minimum dye lot quantity for non-stock colors: 25 pounds. Inquire.

- **Color card:** Specify **CCP-RA** (same as 600 denier card); price, $2.00.
- **Unit put-up:** Priced and sold on 1-pound (3700-yard) cones, 48 to a case.
- **Price per unit:** Each color is priced separately.

	1-9	10-49	Full Case
White	$10.40	$9.20	$8.45
Colors	13.15	12.10	10.50